Anchor Blocks for HDPE Water Pipes

Final Report

Submitted to:

Mr. Camille George Rubeiz, P.E., F. ASCE
Senior Director of Engineering (M&I)
Plastics Pipe Institute
105 Decker Court, Suite 825
Irving, TX 75062

Submitted by:

Harry E. Stewart, PhD, PE,
Ömer Bilgin, PhD, PE,
Keith E. Kesner, PhD, PE, and
Mark A. Yerges, PE

September, 2022

ACKNOWLEDGEMENTS

The authors express thanks to Camille Rubeiz from the Plastics Pipe Institute for his project direction, management, and leadership. We also thank Heath Casteel, from Performance Pipe, Gerry Groen from Infra Pipe Solutions, Ltd., and Jeff Wright from Georg Fischer Piping Systems for their technical advice and guidance. Their insights into municipal water systems and thoughtful participation were invaluable. The funding from the Plastics Pipe Institute is gratefully appreciated and acknowledged.

AUTHORS

The authors of the main body of this report, including all the geotechnical-related material, are Drs. HE Stewart and Ö Bilgin. Dr. KE Kesner and MA Yerges, from CVM Engineers, Inc., prepared the section on the concrete design.

DISCLAIMER

This report presents block sizes, estimated displacements, and reinforced concrete requirements for buried anchor blocks as a result of temperature changes and internal pipe pressures. Forces and movements from additional external loadings and other ground movements are outside the scope of this report

EXECUTIVE SUMMARY

This report presents an approach for sizing anchor blocks to resist thermal and Poisson forces in HDPE piping, and limit the block movements so joint separation does not occur in an attached segmented pipeline. The report reviews the current approach to the design of anchor blocks and points out several overly conservative assumptions leading to excessively large block sizes. The recommended approach identifies the relevant forces acting on an anchor block, presents a rational approach to evaluating the resistance that soil can provide with an adequate margin of safety. It presents a simplified approach to prediction of block movements, and presents minimum anchor block sizes for a particular set of design conditions that covers the majority of HDPE piping sizes for municipal distribution systems.

Current practice for anchor block sizing uses the axial (longitudinal) forces caused by internal pressure, including surge overpressures, and presumptive allowable lateral soil pressures to size anchor blocks. Most methods recognize the need to include additional forces resulting from seasonal thermal stresses, but do not state the magnitude of the stress. Often the presumptive soil pressures are not dependent on pipe burial depth, are overly conservative, and require no geotechnical evaluation other than visual observation of the soil type. These presumptive soil stresses already include conservative reductions, yet an additional factor of safety frequently is applied. This unnecessary redundancy, along with conservative estimates of the allowable soil pressures, result in excessively large anchor blocks.

The recommended approach uses recognized methods for evaluating lateral earth pressures (LEPs) that can act on buried structures. The methods account for the block depth, geometry, soil strength characteristics, and include methods to evaluate block movements that might be transmitted to the attached segmented pipeline. Three-dimensional effects that increase the available resistance of a single buried anchor block are included. Square and rectangular block geometries can be evaluated. Recommendations are given for the factor of safety on block capacity and allowable anchor block movement, but these values can be varied by the design engineer to accommodate the particular application.

In the design methodology, the anchor block passive resistance (capacity) is compared to the driving forces (demand) from the thermal, Poisson, and active earth forces. A minimum Factor of Safety on the block capacity of $FS_{cap} = 1.5$ is recommended. The block displacement is evaluated

and compared to tolerable movements of the joints in an attached segmented pipeline. Manufacturers' representatives for ductile iron and PVC have reported the push-on joints typically used in practice may tolerate 0.50 to 0.75 in. of movement without leakage. Specially designed joints may tolerate significantly more.

Calculation examples are given for a DIPS DR11 8-in.-diameter and a DIPS DR17 24-in.-diameter HDPE pipe that outline all of the steps in the procedure to determine the anchor block size. Tabulated sizes of acceptable anchor blocks are given for typical pipe burial depths of 3.5 to 12 ft in both warm and cold temperature zones. The approach considers that pipelines may be designed for the maximum working pressure, WP, based on the Pressure Class, PC, and a 100% overpressure of $P_{OS} = 1.0 \times PC$, Pipelines also may be designed for lower pressure limits. Block sizes are given in depths of pipe cover increments of 1 ft for full pressure = [(WP = PC) + (P_{OS} = 1.0 × PC)] and also for ⅔ pressure = [(WP = ⅔ PC) + (P_{OS} = ⅔× PC)]. Soil strength parameters for either medium dense and dense backfill soil conditions are used. The types of backfills and placement conditions consistent with these strengths are given.

The position of the pipe within the square anchor block is shown in the adjacent figure. The pipe is centered within the block with a minimum concrete cover all around the pipe of 1 ft. There is a minimum of 2 ft of soil cover above the block.

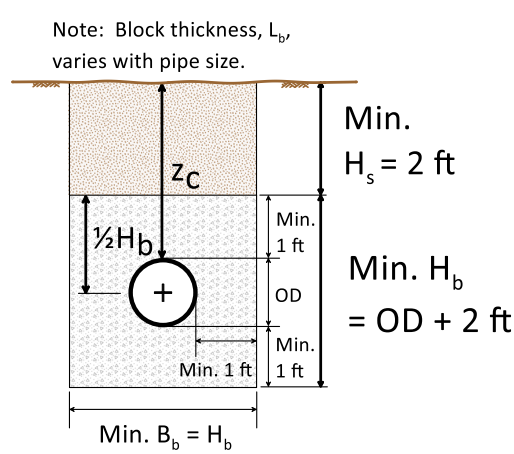

The structural design of the anchor blocks is conceptually similar to the design of reinforced concrete footings. The design procedure presented is based upon ACI 318-19 as the governing code for the reinforced concrete anchor blocks. Earlier versions of ACI 318 will provide similar results. The overall size of the anchor block will be determined based upon the allowable soil pressures and joint movements as described above. The concrete used in anchor block construction is selected to satisfy durability requirements which will control the water/cementitious materials ratio, entrained air content and clear cover to the reinforcing steel. Load from the HDPE pipe section is transferred into the anchor block via flex restraints, which are electrofused to the HPDE pipe. The loads are considered live loads for the anchor block design. The required thickness of the anchor blocks is primarily based upon the two-way (punching) shear

capacity of the section. Application of the load to the anchor block at the flex restraints results in a shallower effective section to resist two-way shear when compared to a traditional footing. Thus, the restraints are offset from the block center to provide a larger effective depth. The reinforcing steel required in the anchor block is checked against both the flexural demand in the anchor block, and the minimum shrinkage and temperature steel requirements. Additional reinforcing steel requirements for added crack control around the HDPE pipe section also are described.

The square anchor block sizes, thicknesses, and flexural steel requirements given in the adjacent table for two common pipe sizes, 8 in. DR11 and 24 in. DR17 DIPS HDPE pipes in both *warm* and *cold* temperature zones. The steel bars are placed each way in the block. Block sizes for IPS pipe are roughly the same as those for DIPS pipe. Block sizes and reinforcements for other pipe pressures and temperature conditions are given in Sections 5 and 6.

Square block sizes and reinforcement for two common pipe sizes. Dense soil, *Warm* and *Cold* temp. zones. Full pressure: (WP = PC) + (P_{OS} = 1.0 × PC), Straight bars.

DIPS pipe size		Depth to crown, z_c	Block thickness, L_b	Block size, $H_b \times B_b$	Steel bars (each way)
8 in. DR11		3.5 to 12 ft	16 in.	3.5 ft	6 #4
24 in. DR17		4.5[a] to 12 ft	24 in.	5.0 ft	10 #5

a – FS_{cap} = 1.46 at z_c = 4.5 ft

The report presents a rational method for dimensioning anchor block to resist anticipated forces resulting from thermal stresses, Poisson forces due to internal water pressures, and lateral earth pressures. Fundamental geotechnical and structural principles consistent with engineering practice are used. Code requirements are followed as given by the American Concrete Institute's Building Code Requirements for Structural Concrete, ACI 318-19. The block dimensions represent sizes necessary to resist upper bound limits of water pipe design. Movements of the blocks do occur, and are substantially less than the tolerable displacements of the joints in an attached segmented pipeline.

TABLE OF CONTENTS

TABLE OF CONTENTS (continued)

TABLE OF CONTENTS (completed)

LIST OF FIGURES

LIST OF FIGURES (continued)

LIST OF FIGURES (completed)

LIST OF TABLES

LIST OF TABLES (completed)

LIST OF SYMBOLS

A_{wall}	Pipe wall area
B_b	Width of anchor block perpendicular to pipe direction
d_{agg}	Maximum size of coarse aggregate in concrete
DIPS	Ductile iron pipe size
D_M	Mean diameter = (OD+ID)/2 = OD – t
DR	Dimension ratio = OD/t
FS_{cap}	Factor of safety against lateral horizontal capacity
F_a	Active force magnified for 3-D effects
F_{ah}	Horizontal component of active force
F_{av}	Vertical component of active force
F_D	Sum of horizontal driving forces
F_p	Passive force magnified for 3-D effects
F_{ph}	Horizontal component of passive force
F_T	Thermal force
F_ν	Poisson force
h	Height of anchor block
H	Depth to the base of the anchor block
H_b	Height of anchor block
H_s	Depth of soil above anchor block
ID	Pipe inside diameter = OD – 2t
IPS	Inch pipe size
K_a	Coefficient of active lateral earth pressure
K_{aC}	Coulomb coefficient of active lateral earth pressure
K_{aR}	Rankine coefficient of active lateral earth pressure
K_p	Coefficient of passive lateral earth pressure
K_{pC}	Coulomb coefficient of passive lateral earth pressure
K_{pL}	Lancellotta coefficient of passive lateral earth pressure
K_{pR}	Rankine coefficient of passive lateral earth pressure
K_{ps}	Log spiral coefficient of passive lateral earth pressure
K_{soil}	Soil lateral stress coefficient
L_b	Length of anchor block parallel to pipe direction
ℓ	Width of anchor block perpendicular to pipe direction
M	3-D magnification factor
M_{max}	Maximum 3-D magnification factor = 2.0
N	Normal force
OD	PE pipe outside diameter
PC	Pressure class

LIST OF SYMBOLS (continued)

P_a	Active force
$P_{a\phi}$	Active force due to soil weight
P_{as}	Active force due to soil surcharge
P_{OS}	Occasional surge pressure
P_p	Passive force
$P_{p\phi}$	Passive force due to soil weight
P_{ps}	Passive force due to soil surcharge
p	Pipe internal pressure
q_s	Soil surcharge
rr	Reinforcement ratio
R_f	Hyperbolic reduction factor
R_{ps}	Friction angle reduction factor for K_{ps} when $\delta_w/\phi' < 1.0$
Soil density	Qualitative description of soil density: Loose, Medium, or Dense
t	Pipe wall thickness
t_a	Average pipe wall thickness for hydraulic design
T_{base}	Shear force at base of anchor block
T_{side}	Shear force at side of anchor block
T_{top}	Shear force at top of anchor block
t	Pipe wall thickness
WP	Working pressure
W_b	Total weight of anchor block, including concrete, pipe, and water
W_c	Weight of (concrete) in the anchor block
W_s	Weight of soil above anchor block
Y	Wall displacement
Y/H_b	Wall displacement-to-height ratio necessary to develop full passive pressure
X	Hyperbolic shape factor
δ_j	Allowable pipe joint opening
δ_b	Anchor block lateral displacement
δ_{bh}	Anchor block lateral displacement from hyperbolic model
$\delta_{b\ell}$	Anchor block lateral displacement from linear model
δ_{base}	Anchor block/soil interface friction along the block base
δ_{top}	Anchor block/soil interface friction along the block top
δ_{side}	Anchor block/soil interface friction along the block sides
δ_w	Anchor block/soil friction angle along the block faces
ϕ'	Soil effective stress friction angle
γ_c	Unit weight of concrete

LIST OF SYMBOLS (completed)

γ_t	Total unit weight of soil
ν	Poisson's ratio
ν_{long}	Long-term HDPE Poisson's ratio = 0.45
ν_{short}	Short-term HDPE Poisson's ratio = 0.35
σ_{as}	Active stress due to the soil surcharge
$\sigma_{a\phi}$	Active stress due to the soil weight (friction)
σ_h	Horizontal stress
σ_ℓ	Longitudinal (axial) stress
σ_{ps}	Passive stress due to the soil surcharge
$\sigma_{p\phi}$	Passive stress due to the soil weight (friction)
σ_v	Vertical stress
σ_T	Thermal stress
σ_θ	Pipe circumferential (hoop) stress

Symbols used in concrete design sections follow the notation used in ACI 318-19 and are defined therein.

Section 1

Introduction

Anchor blocks frequently are required to resist axial forces and movements in buried plastic piping. This is particularly important when continuous high density polyethylene (HDPE) piping is connected to a segmented pipeline. Without an anchor block to resist the tensile thermal and Poisson forces, the joint(s) of the segmented pipe could separate causing a leak. This document describes an approach used to design the anchor blocks. The report is organized in six main sections and two appendices. Section 1 is a brief introduction. Section 2 describes the commonly used approaches for sizing the blocks, and the limitations of such approaches. Section 3 provides the recommended geotechnical procedures for the general approach using lateral earth pressures (LEPs) to size the anchor blocks. The system of forces acting on the pipeline is described and procedures are given to estimate these forces. The LEPs used to calculate active and passive forces are described and recommendations are given for properties that require particular consideration. Section 3 also includes a procedure to estimate three-dimensional effects that account for burial depth and anchor block geometry. Thermal and Poisson forces are included in the approach. The Poisson forces are the largest component of the forces acting on an anchor block. A key aspect of the methodology is to assess the anchor block movements. The movements of the block must be less than the tolerable displacements in the joints of the attached segmented pipeline. Straightforward methods are used to estimate anchor block displacements. Allowable block displacements are limited to $\delta_b \leq 0.5$ in., which is less than an industry-recommended minimum joint opening for several types of segmented water pipes. Section 3 also discusses the factor of safety used in the methodology. A minimum factor of safety of against exceeding the soil passive capacity of $FS_{cap} \geq 1.5$ is used for sizing the anchor blocks. The structural recommendations for the design of the concrete anchor blocks is in Section 4. Concrete durability is addressed and recommendations provided for environmental protection. The strength requirements are given for both one-and two-way (punching) shear and minimum block thicknesses are evaluated. Steel reinforcement requirements are described, along with the internal restraint systems holding the encased HDPE piping within the block.

Section 5 gives the required sizes for anchor blocks for nominal 4- to 24-in.-diameter HDPE using the general approach outlined in Section 3 and 4. Anchor block dimensions are given for DIPS and IPS HDPE pipe in *warm* and *cold* temperature zones, for medium dense and dense soil backfill

conditions, for full design water pressures, and for ⅔ design water pressures, each including surge pressures. Section 5 also gives the number of flex restraints and steel reinforcement required for the anchor blocks. Section 6 presents the summary of the report and provides the primary conclusions. Step-by-step example calculations are provided for two pipe sizes. Anchor block sizing details for 8-in. and 24-in.-diameter DIPS HDPE pipe are given in Appendix A. The structural design and reinforcement details of the concrete blocks for the same pipe sizes are given in Appendix B.

Section 2

Current practice for anchor block sizing

2.1. Introduction

Anchor blocks are different than thrust blocks. Anchor blocks provide a location of near-fixity for a pipeline. Thrust blocks resist forces from directional changes, tees, valves, dead ends, or diameter reductions in pressurized piping systems. The two primary axial forces that must be resisted by anchor blocks are the thermal force resulting from temperature changes and the Poisson force due to internal pressure. The combined axial force, $T_{nominal}$, which must be resisted by the anchor block is the sum of the thermal force, F_T, and the Poisson, F_ν, given by:

$$T_{nominal} = F_T + F_\nu \tag{2.1}$$

2.2. Design forces

2.2.1. Poisson force, F_ν

When a pipeline is pressurized the pipe experiences an increase in circumferential tensile stress causing an increase in the pipe diameter. This diameter expansion causes a tendency for the pipe to shorten. When the pipe is restrained from shortening an axial tensile stress will develop in proportion to the internal pressure, p, and the pipe material Poisson's ratio, ν. This tensile stress multiplied by the pipe wall area is called the Poisson force, F_ν.

The maximum Poisson force, F_ν, depends on the circumferential (hoop) stress, σ_θ, generated by the internal pressure. A conservative approach is to use the maximum working pressure, WP, for a given Pressure Class, PC, along with an additional occasional surge pressure of $P_{OS} = 1.0 \times PC$. The WPs for several pipe Dimension Ratios, DR, are given in Table 2.1. Table 2.1 is adapted from AWWA M55 (2020) for HDPE at 80°F, and the values of WP are rounded for convenience based on the allowable circumferential hydrostatic design stress, HDS = 1,000 psi for PE4710. Using the HDS when estimating the Poisson force maximizes the Poisson force, F_ν. In most cases, the Poisson force is the largest driving forces in the PE pipe/soil/anchor block system.

Table 2.1. Allowable stresses for PE4710

Pipe DR	Working Pressure, WP, based on Pressure Class, PC	Hydrostatic Design Stress, HDS, (psi)
9	250 psi (1.72 MPa)	1,000 (6.89 MPa)
11	200 psi (1.38 MPa)	
13.5	160 psi (1.10 MPa)	
17	125 psi (0.86 MPa)	

MPa = psi × (6.89/1,000)

The actual circumferential stress due to the working pressure typically is slightly less than the HDS. AWWA M55 convention is to use the following formula, based on the mean diameter, to determine the hoop stress, σ_θ:

$$\sigma_\theta = \frac{p(OD - t)}{2t} = \frac{p}{2}\frac{(OD - t)}{t} = \frac{p(DR - 1)}{2} \tag{2.2}$$

in which:

p = internal pressure,
OD = outside diameter,
t = wall thickness, and
DR = dimension ratio.

The σ_θ from the working pressure, WP, must be ≤ HDS = 1,000 psi (6.89 MPa). For the WP, a long-term Poisson's ratio of $\nu_{long} = 0.45$ is used. For the occasional surge pressure, P_{OS}, the short-temp Poisson's ratio of $\nu_{short} = 0.35$ is used. The occasional surge pressure is taken as $P_{OS} = 1.0 \times PC$, where PC is the Pressure Class for the pipe.

The Poisson force, F_ν, is given as:

$$F_\nu = \left[\sigma_\ell = \nu_{long}(\sigma_\theta)_{WP} + \nu_{short}(\sigma_\theta)_{P_{OS}}\right](A_{wall} = \pi D_M t) \tag{2.3}$$

in which:

σ_ℓ = longitudinal (axial) tensile stress,
A_{wall} = pipe wall area, and
D_M = mean (average) wall area = OD – t.

2.2.2. Thermal force, F_T

AWWA M55 (2020) notes that thermal forces also must be considered, but does not state the temperatures to use for determining the thermal forces. In a report to PPI (Stewart and Bilgin, 2020) evaluated the thermal stresses in HDPE piping for different construction practices and temperature zones for the United States and lower Canada. The evaluations accounted for viscoelastic stresses and relaxation due to temperature-time changes resulting from 1) installation, 2) relaxation, and 3) seasonal changes, as well as 4) a rapid influx of cold water.

Pipe installation temperatures could range from an initial temperature from 100 to 80°F (38 to 27°C), with a final temperature at the end of installation of 70 to 60°F (21 to 16°C). Seasonal temperature changes for the three temperature zone were based on U.S. and Canadian weather data from several governmental sources and measured pipe temperatures where available.

The temperature zones used are shown in Figure 2.1. Summer ground temperatures at pipe depth for the warm, moderate, and cold zones were 70, 65 and 60°F (21, 18, and 16°C). Ramped temperature decreases over 90-day-periods to 50, 40 and 33°F (10, 4, and 1°C) for the warm, moderate, and cold zones, respectively. Ramped temperature increases over similar ramped 90-day-periods returned the pipe to the summer ground temperatures. Typically pipe burial depths are below the frost line and the coldest water temperature reported by water industry personnel was about 33°F (1°C), so a *lowest* temperature just above freezing is reasonable. Thus, the *maximum* design temperature change due to seasonal variations in ground temperature is about ΔT = 37 to 40°F (21 to 22°C) within the northeastern U.S., lower Canada, and other "cold" temperature zones. Extreme temperature changes in warm temperature zones, such as those experienced in the parts of the southern U.S. in 2021, also could warrant such extreme seasonal temperature changes.

The stresses are given in Table 2.2. Selection of "*Best* construction", which results in lower thermal stresses [Stewart and Bilgin (2020)] is recommended for the anchor block installations, unless otherwise warranted. The thermal force is the thermal stress, σ_T, multiplied by the pipe wall area, and is given as:

$$F_T = \sigma_T \left(A_{wall} = \pi D_M t \right) \tag{2.4}$$

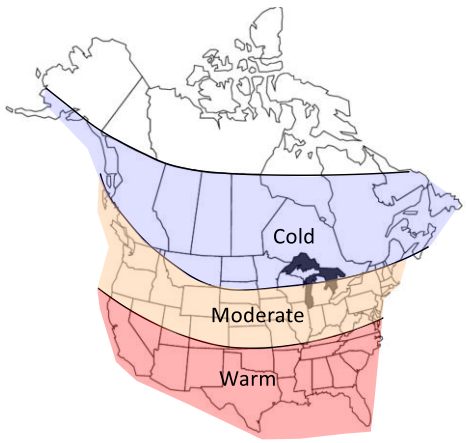

Figure 2.1. Temperature zones in lower Canada and U.S.

Table 2.2. Final thermal stresses for *Typical* and *Best Practices* construction [after Stewart and Bilgin (2020)]

Temperature zone	*Typical* construction Final stress, σ_T (psi)	*Best Practices* construction Final stress, σ_T (psi)
Warm	255	110
Moderate	290	150
Cold	300	180

Most current applications for anchor block sizing do not allow the inclusion of a thermal force directly in the calculation method, and the block size is only based on the Poisson force, which depends on internal pressure. If an explicit method is not given, an alternative is to add an "equivalent pressure", p_{eq}, to the working pressure, WP, to account for the thermal stress. Eqn. 2.4 gives the thermal force as dependent on the design thermal stress. The p_{eq} is determined by setting the thermal force equal to the Poisson force caused by an equivalent pressure-induced longitudinal stress, as given by:

$$\text{Set } \left[F_T = \sigma_T\left(A_{wall} = \pi D_M t\right)\right] = \left[\left(F_\nu\right)_{eq} = \nu_{long}\left(\sigma_\theta\right)_{eq}\left(A_{wall} = \pi D_M t\right)\right]$$
$$\sigma_T = \nu_{long}\left(\sigma_\theta\right)_{eq} \Rightarrow p_{eq} = \frac{2\sigma_T}{\nu_{long}\left(DR - 1\right)} \tag{2.5}$$

Now the long-term longitudinal stress due to the WP is adjusted by adding p_{eq} to the WP, the short-term longitudinal stress due to the occasional surge pressure, P_{OS}, remains the same, and no additional thermal stress is added to the overpressure surge. This gives the design axial force as:

$$F_{axial} = \left\{\nu_{long}\left[\left(\sigma_\theta\right)_{WP} + p_{eq}\right] + \nu_{short}\left(\sigma_\theta\right)_{P_{OS}}\right\}\left(A_{wall} = \pi D_M t\right) \tag{2.6}$$

An alternative method to account for the thermal stress is to add σ_T directly to the Poisson stresses as:

$$F_{axial} = \left[\nu_{long}\left(\sigma_\theta\right)_{WP} + \nu_{short}\left(\sigma_\theta\right)_{P_{OS}} + \sigma_T\right]\left(A_{wall} = \pi D_M t\right) \tag{2.7}$$

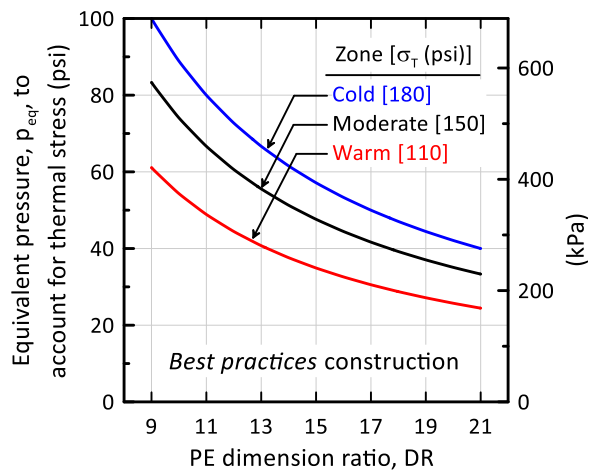

Figure 2.2. Equivalent pressure to account for thermal stress

Figure 2.2 shows the equivalent pressure for *Best Practices* construction in the three temperature zones. Consider a nominal 12-in.- diameter DIPS DR11 HDPE pipe. Using WP = PC = 200 psi, with P_{OS} = 200 psi, the Poisson force is approximately F_ν = 36,190 lb. For *Best practices* construction in a *Cold* temperature zone, the thermal stress is σ_T = 180 psi, giving a thermal force of about F_T = 8,140 lb. The combined force is F_{axial} = 44,330 lb (see Table 2.3). If using the equivalent pressure method, p_{eq} = 80 psi, and adding 80 psi to the WP results in a Poisson force of F_ν = 44,330 lb and a thermal force of F_T = 0, and the combined force is the same.

Table 2.3. Thermal plus Poisson forces for DIPS DR11 and DR17 HDPE pipe

Pipe size (in.)	$F_T + F_\nu$ (lb)[a] for DIPS DR11 pipe				$F_T + F_\nu$ (lb)[a] for DIPS DR17 pipe			
	WP = PC and P_{OS} = 1.0 × PC		WP = ⅔ PC and P_{OS} = ⅔ × PC		WP = PC and P_{OS} = 1.0 × PC		WP = ⅔ PC and P_{OS} = ⅔ × PC	
	Warm zone	Cold zone	Warm zone	Cold zone	Warm zone	Cold zone	Warm zone	Cold zone
4	5,440	5,860	3,850	4,270	3,650	3,930	2,580	2,860
8	19,350	*20,840*	13,680	15,170	12,960	13,960	9,160	10,160
12	41,170	44,330	29,100	32,270	27,580	29,700	19,500	21,620
18	89,840	96,750	63,510	70,420	60,180	64,810	42,550	47,180
24	157,270	169,370	111,180	123,280	105,350	*113,460*	74,480	82,590

a – rounded to nearest 10 lb

Table 2.4. Thermal plus Poisson forces for IPS DR11 and DR17 HDPE pipe

Pipe size (in.)	$F_T + F_v$ (lb)[a] for IPS DR11 pipe				$F_T + F_v$ (lb)[a] for IPS DR17 pipe			
	WP = PC and P_{OS} = 1.0 × PC		WP = ⅔ PC and P_{OS} = ⅔ × PC		WP = PC and P_{OS} = 1.0 × PC		WP = ⅔ PC and P_{OS} = ⅔ × PC	
	Warm zone	Cold zone	Warm zone	Cold zone	Warm zone	Cold zone	Warm zone	Cold zone
4	4,780	5,150	3,380	3,750	3,210	3,450	2,270	2,510
8	17,600	18,950	12,440	13,790	11,790	12,690	8,330	9,240
12	38,410	41,360	27,150	30,110	25,730	27,710	18,190	20,170
18	76,550	82,440	54,120	60,010	51,280	55,230	36,250	40,200
24	136,090	146,560	96,210	106,680	91,170	98,180	64,450	71,460

a – rounded to nearest 10 lb

2.2.3 Combined axial forces

The combined thermal and Poisson forces for DIPS and IPS DR11 and DR17 HDPE pipe, respectively, are given in Tables 2.3 and 2.4. The forces have been rounded to the nearest 10 lb.

2.3. Presumptive allowable earth pressures

Most design methods for sizing anchor block rely upon presumptive allowable lateral pressures. These presumptive pressures frequently are overly conservative, are not based on laboratory or field tests, and may be based only on simple visual soil identification. The presumptive pressures already include a safety factor, and this factor generally is not stated. The face area of the anchor block ($H_b \times B_b$) is the design axial force, typically only F_v, divided by the factored presumptive pressure.

Figure 2.3 shows several presumptive bearing pressures for cohesionless soils that have been used for anchor blocks. Of the nine sources listed, only the 2018 International Building Code (2020) and the National Engineering Handbook (2005) vary the allowable pressure with depth, with the pressures shown in Fig. 2.3 for the depth range of 5 to 8 ft. Several of the referenced sources have allowable bearing pressures of only a few thousand psf.

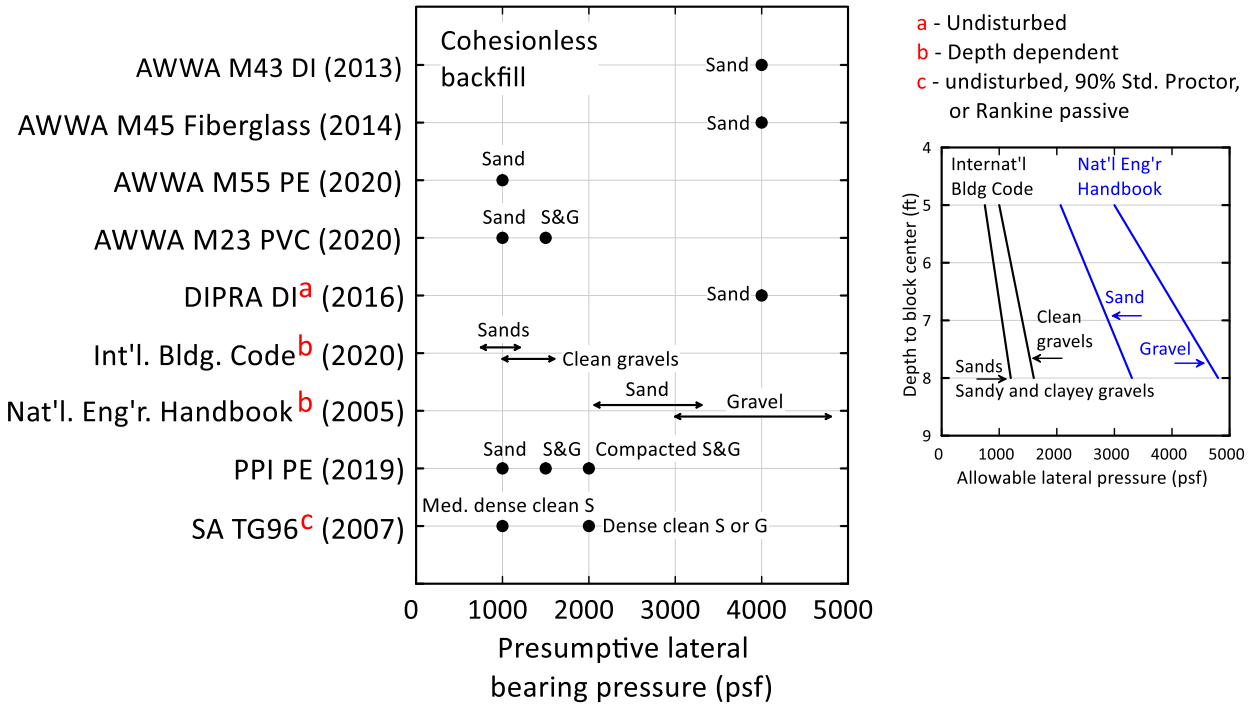

Figure 2.3. Presumptive allowable lateral bearing pressures

If the presumptive lateral pressure is 1,000 psf then the required anchor block bearing area is slightly over 44 ft^2, or about a 6.7-ft-square anchor block. If a factor of safety of 1.5 is *also* included with the presumptive pressure, the block size increases to over 64 ft^2. Note that 1) a judgmental factor of safety is *already* included when using presumptive allowable pressures, so an additional factor should *not* be used for sizing the block, and 2) this simplified approach does not use the net bearing area of the block, corrected for the pipe area.

Section 3

Geotechnical recommendations for concrete anchor blocks

3.1. Introduction

Many geotechnical engineering systems are based on the evaluation of lateral earth pressures (LEPs). These include retaining walls, braced and tied-back excavations, quay walls, and many other structures. Thus, the evaluation of lateral earth pressures is a well-recognized part of geotechnical engineering practice. The HDPE pipe is fixed within the anchor block with the axial force pulling on the block. Even though the block "anchors" the pipe location, some deformations within the system must occur. Movement of the block in the direction of the axial force will cause the development of soil passive resistance to the axial force. Movements will also initiate active forces on the back side of the block. Behind the block is a jointed, segmented pipeline tied into the HDPE line. This section of the report presents an approach used to estimate active and passive earth pressures and three-dimensional effects that influence the capacity of the anchor blocks. This allows definition of the anchor block factor of safety against exceeding the soil capacity. The method also includes a simplified approach for estimating the anchor block movements, which must be less than the tolerable movements at the joints of the attached segmented pipeline. An anchor block must be sized so that neither the passive capacity of the soil nor the tolerable movement of an attached joint is exceeded.

3.2. Geometry

Figure 3.1 shows the geometry of an anchor block for HDPE pipe. On the right side of the block there is a transition fitting connecting the HDPE to the existing jointed pipeline. The transition fitting securely connects the HDPE pipe to the attached segmented pipe. The depth of soil cover above the anchor block is H_s. The dimensions of the anchor block (height, base width, length along pipeline) are $H_b \times B_b \times L_b$. The weight of the soil above the block is $W_s = \gamma_t (H_s \times B_b \times L_b)$ and the weight of the block is $W_c = \gamma_c (H_b \times B_b \times L_b)$ - (Area of pipe $\times L_b$), where γ_t and γ_c are the unit weights of the soil and concrete, respectively. The weights of the pipe and water in the pipe are added in to determine the total weight of the block, W_b. Figure 3.1 shows the pipe centered vertically at a depth of $\frac{1}{2}H_b$ within the block. Inside the anchor block attached to the pipe is a restraining system to fix the pipe firmly within the block.

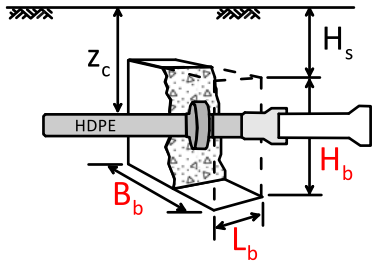

Figure 3.1. Anchor block geometry

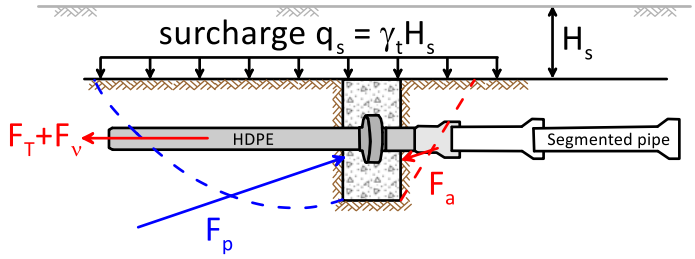

Figure 3.2. Anchor/pipe profile view with forces

The forces in the soil-anchor block-pipe system are shown in Figure 3.2. The weight of the soil above the block, W_s, and the weight of the block, W_b, are not shown for clarity. The depths of soil over the active and passive zones are treated as surcharges, $q_s = \gamma_t H_s$. Note that the weight of the soil above the anchor block, W_s, is equivalent to $q_s \times B_b \times L_b$. The strength of the soil in the surcharge is not included, which is a conservative assumption. The height, H_b, is used to determine the active soil force, F_a, and the passive soil force, F_p, for both faces. The thermal and Poisson forces, $F_T + F_v$, respectively, in the PE piping also are shown.

Note that any soil/pipe frictional forces are not included. Any frictional forces on the transition fitting on the active (right side of the block in Figure 3.2) are very difficult to quantify due to the complex geometry surrounding the fitting. The soil/pipe friction for the HDPE on the passive side (left side of the block in Figure 3.2) would require an evaluation of the pipe length involved in the soil friction, and the likelihood that this length would extend beyond any special compacted backfill surrounding the anchor block and into a different backfill condition. Ignoring both of these is slightly conservative, and would not be a significant factor in estimation of the forces involved.

3.3. Anchor block forces

Figure 3.3 shows the failure surfaces used in these evaluations. The active side (on the right for the figure) shows a triangular area that is the active zone. For the forces on this side, Coulomb theory (Coulomb, 1776) is used for the active lateral earth pressure (LEP). The main reason for selecting Coulomb over Rankine theory (Rankine, 1857) is the inclusion of wall friction in the Coulomb method. In addition, the planar Coulomb failure surface on the active side yields results that are

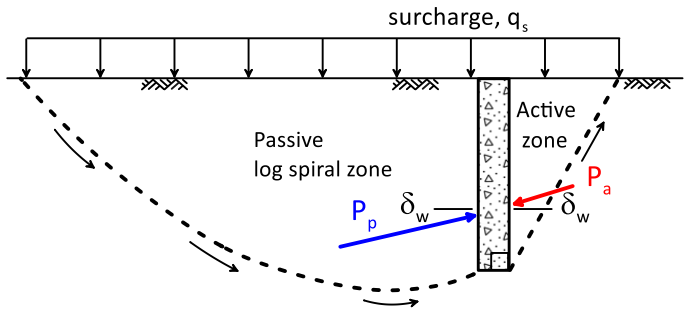

Figure 3.3. Failure surfaces for passive and active sides of anchor block

similar to the slightly more accurate curved log spiral surface when estimating active earth pressures, but presents an easier geometry to evaluate.

On the passive side, shown on the left in Figure 3.3, a log spiral failure surface is used. This is an accurate solution for the passive thrust, whereas the Coulomb solution could overestimate the passive thrust by 15 to 20%. Subscripts are used on the Coulomb LEP coefficients K_{aC} and K_{pC} to distinguish them from the Rankine coefficients, K_{aR} and K_{pR}. For the log spiral failure, the passive LEP coefficient is called K_{ps}.

Wall friction is very important when evaluating the wall forces for passive pressures, and since wall friction is considered on the passive face, it is used on the active face for consistency. The inclusion of wall friction affects the resultant angles of the active and passive forces, P_a and P_p, acting on the wall, as shown in Figure 3.4. Whether the forces are inclined upward or downward depends on the movement of the soil zone. For the active case, the direction *for almost all* cases of soil movement is downward, indicated by the small downward pointing arrow in the upper corner of the active soil block, causing a downward drag on the wall. This leads to a downward active force inclination acting on the wall as shown in Figure 3.4. For the passive case, *the most common*

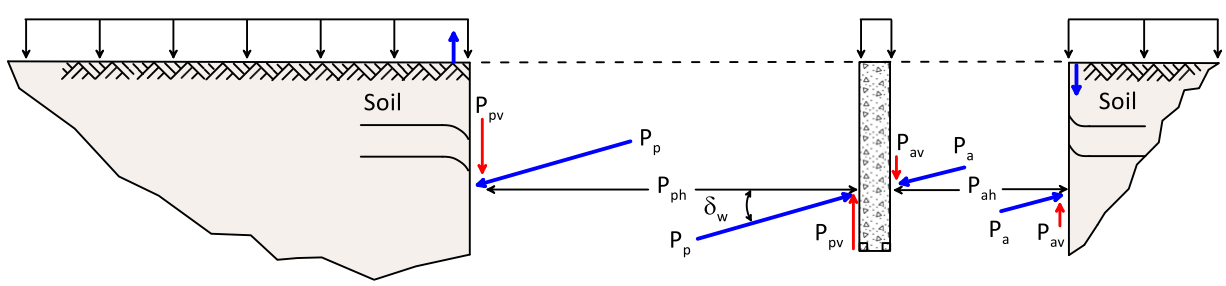

Figure 3.4. Orientation and sign convention for active and passive forces and wall friction

direction of soil movement is upward, indicated by the small upward pointing arrow in the upper corner of the passive soil block. There are some cases where downward relative movement can mobilize passive failure. The engineer must decide on the direction of soil movement for the particular case at hand. When the soil movement is upward, the most common case, this causes an upward drag on the wall, leading to an upward passive force inclination on the wall as shown in Figure 3.4. This upward or downward force inclination frequently leads to confusion about the sign of positive or negative wall friction, so it is cautioned to use the signs without knowing the assumed direction of soil movement. Algebraic signs of the wall friction angle also can lead to difficulty in interpreting some figures and tables where an algebraic sign is given to the wall friction angle.

Table 3.1 lists interface friction angles for both mass concrete and finished concrete in contact with cohesionless soils (NAVFAC, 1986). Often the wall friction, δ_w, is given in terms of a ratio relative to the soil effective stress friction angle,ϕ', i.e., δ_w/ϕ'. Using only δ_w allows for varying δ_w independently of ϕ'. The values given in Table 3.1 may not be mobilized fully because of the requirement for vertical equilibrium. This is explained in a following section..

Table 3.1. Interface friction angles between concrete and cohesionless soils (NAVFAC, 1986)

Interface materials	Upper limit of interface friction angle, δ_w
Mass concrete on the following foundation materials:	
Clean gravel, gravel-sand mixtures, coarse sands	29° to 31°
Clean fine to medium sand, silty medium to coarse sand, silty or clayey gravel	24° to 29°
Formed concrete on the following foundation materials:	
Clean gravel, gravel-sand mixtures	22° to 26°
Clean sand, silty sand-gravel mixtures	17° to 22°
Silty sand, gravel or sand mixed with silt or clay	17°

The equations used for the Coulomb active and passive LEP coefficients are given in Eqns. 3.1 and 3.2, respectively (Terzaghi, 1943). Note that for vertical wall faces (α = 90°), horizontal backfill (β = 0°), and no wall friction (δ_w = 0°), the Coulomb and Rankine LEP coefficients are the same.

Coulomb active, K_{aC} - Terzaghi (1943)

$$K_{aC} = \frac{\sin^2(\alpha+\phi)}{\sin^2\alpha\sin(\alpha-\delta_w)\left[1+\sqrt{\frac{\sin(\phi+\delta_w)\sin(\phi-\beta)}{\sin(\alpha-\delta_w)\sin(\alpha+\beta)}}\right]^2}$$

$$\alpha = \text{wall back slope } (90^\circ = \text{vertical}) \tag{3.1}$$

$$\beta = \text{backfill slope } (0^\circ = \text{horizontal})$$

$$\text{for } \alpha = 90^\circ,\ \beta = 0^\circ,\ \text{and } \delta_w = 0^\circ:\ K_{aC} = K_{aR} = \frac{1-\sin\phi'}{1+\sin\phi'}$$

Coulomb passive, K_{pC} - Terzaghi (1943)

$$K_{pC} = \frac{\sin^2(\alpha-\phi)}{\sin^2\alpha\sin(\alpha+\delta_w)\left[1-\sqrt{\frac{\sin(\phi+\delta_w)\sin(\phi+\beta)}{\sin(\alpha+\delta_w)\sin(\alpha+\beta)}}\right]^2}$$

$$\alpha = \text{wall back slope } (90^\circ = \text{vertical}) \tag{3.2}$$

$$\beta = \text{backfill slope } (0^\circ = \text{horizontal})$$

$$\text{for } \alpha = 90^\circ,\ \beta = 0^\circ,\ \text{and } \delta_w = 0^\circ:\ K_{pC} = K_{pR} = \frac{1+\sin\phi'}{1-\sin\phi'}$$

in which:

α = wall back slope angle (α = 90° = vertical),
β = backfill slope angle (β = 0° = horizontal),
δ_w = wall friction angle, and
ϕ' = soil effective stress friction angle.

The coefficients are shown graphically in Figure 3.5, which shows a much more significant influence of wall friction on K_{pC} than on K_{aC}. Note the order of magnitude difference in the vertical scales in Figure 3.5 for the active and passive LEP coefficients.

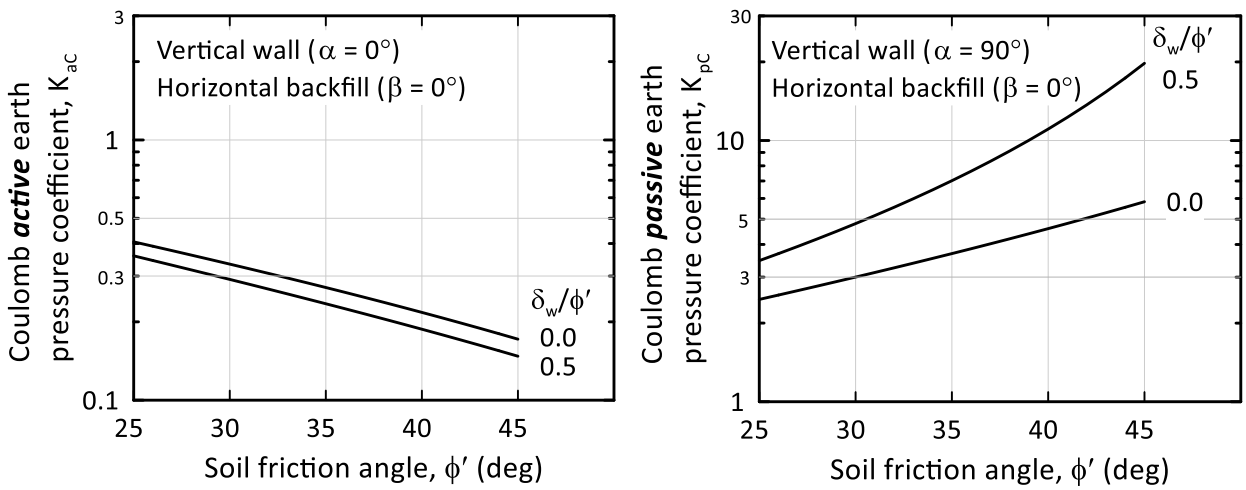

a) Active b) Passive

Figure 3.5. Coulomb active and passive LEP coefficients including wall friction

3.3.1. Active force, P_a

The active force has two components; one for the surcharge term, P_{as}, and the other for the soil weight term, $P_{a\phi}$. The height of soil above the block, H_s, is treated as a surcharge $q_s = \gamma_t H_s$. The active surcharge and the active soil weight term are calculated using the Coulomb active coefficient, K_{aC}. Wall friction is considered. Interface friction angles for cohesionless soil against formed concrete would be used for the anchor block faces. Positive wall friction will cause the active force to have a downward inclination on the wall, as shown in Figure 3.4.

The forces acting on the active side of the block are given in terms of the surcharge and weight stresses, σ_{as} and $\sigma_{a\phi}$, respectively, times the net area of the block face, which is the full face area minus the pipe area. These forces are given in Eqn. 3.3a as:

$$\begin{aligned} P_{as} &= \sigma_{as}\left(A_b\right)_{net} = K_{aC} q_s \left(A_b\right)_{net} = \left(K_{aC}\gamma_t H_s\right)\left(A_b\right)_{net} \\ P_{a\phi} &= \sigma_{a\phi}\left(A_b\right)_{net} = \left(½ K_{aC}\gamma_t H_b\right)\left(A_b\right)_{net} \\ \left(A_b\right)_{net} &= H_b \times B_b - \left[A_{pipe} = \pi\left(OD\right)^2/4\right] \end{aligned} \tag{3.3a}$$

Not using the net area for the weight term in $P_{a\phi}$ gives the more familiar expression:

$$P_{a\phi} = ½ K_{aC}\gamma_t H_b^2 \left(\text{units: force per unit length into the page}\right) \times B_b \left(\text{length}\right) \tag{3.3b}$$

3.3.2. Passive force, P_p

The passive forces also have two components; one for the surcharge term, P_{ps} and the other for the soil weight term, $P_{p\phi}$. The height of soil above the block, H_s, is again treated as a surcharge $q_s = \gamma_t H_s$. Wall friction for upward soil movement is considered on the passive side.

Figure 3.3 showed the log spiral failure zone used for the passive forces. A conventional full Coulomb wedge along the face of the wall should not be used to evaluate forces on the passive side. Using Coulomb K_{pC} with a full wedge can overestimate the passive force by as much as 50% (Brinch Hanson, 1953). The log spiral portion adjacent to the wall can have wall friction. The LEP coefficients use in this report are those developed by Caquot & Kérisel (1948) and again published by Kérisel & Abis (1990). These coefficients are widely used in practice. Lancellotta (1990) has presented an analytical lower bound plasticity solution for earth pressures, which gives slightly lower passive pressures than Caquot & Kérisel and Kérisel & Abis.

The LEP coefficients for the Kérisel & Abis (1990) log spiral approach, K_{ps}, and those given by NAVFAC (1986) are shown in Figure 3.6, and they are nearly the same. NAVFAC states that the LEP coefficients for passive pressure they present are based on Caquot & Kérisel (1948), even though the failure surface in NAVFAC is not a full log spiral, but a composite log spiral zone adjacent to the wall and a Rankine zone near the soil surface (Ohde, 1938). This also is what Terzaghi (1943) refers to as a log spiral solution.

Cohesionless trench backfill is expected to have an effective stress friction angle, ϕ', typically ranging from 30° to 45°. Wall friction with formed concrete anchor block faces frequently is in the range of δ_w = 18 to 25°. However, not all of the wall friction may be mobilized, depending on the induced uplift drag on the wall caused by the soil movement, which cannot be more than the gravity forces. As δ_w/ϕ' decreases the passive LEP coefficients decrease. When the K_{ps} values for $\delta_w/\phi' < 1$ are divided by the K_{ps} values for $\delta_w/\phi' = 1$, the result is a Reduction factor, R_{ps}. Table 3.2 gives the Kérisel & Abis (1990) K_{ps} reduction factors for a few soil friction angles and various δ_w/ϕ' values. For example, the K_{ps} value for $\phi' = 35°$ and $\delta_w/\phi' = 1$ from Figure 3.6 is $K_{ps} = 10.0$. For $\phi' = 35°$ and $\delta_w/\phi' = 1/3$ the value of $R_{ps} = 0.518$ so is $K_{ps} = 10.0 \times 0.518 = 5.18$.

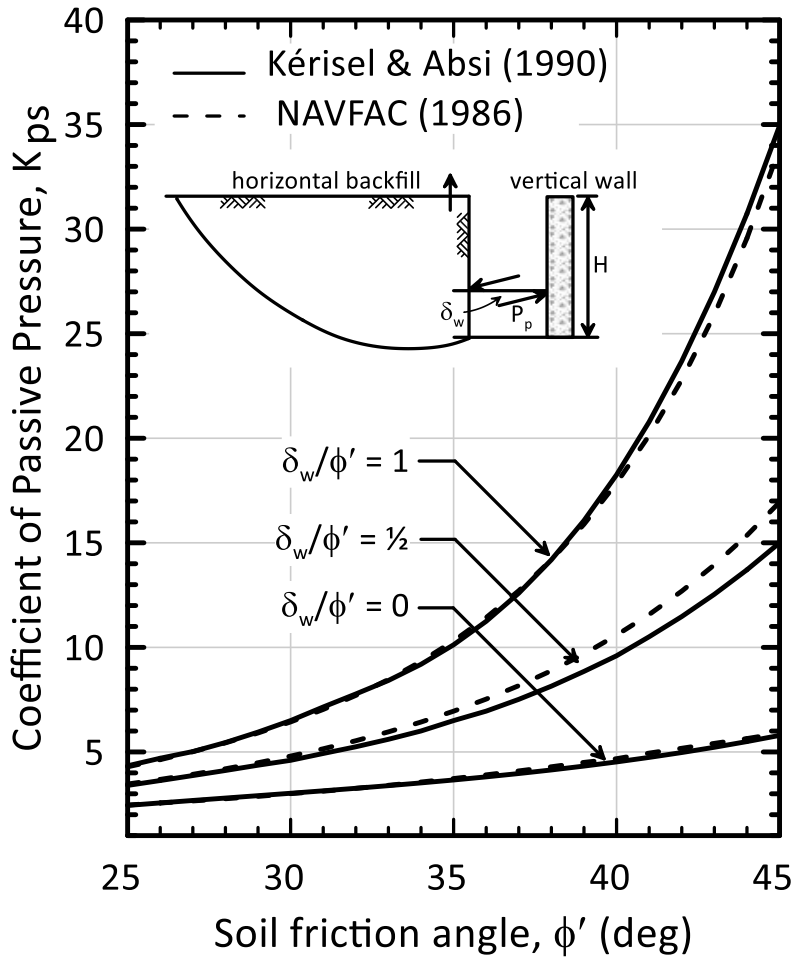

Figure 3.6. Passive earth pressure coefficients, K_{ps}

Table 3.2. Passive LEP Reduction factors, R_{ps}, for various δ_w/ϕ'

	Reduction factor, R_{ps}, for various δ_w/ϕ'									
ϕ'	0	0.1	0.2	0.3	1/3	0.4	1/2	0.6	2/3	0.7
25°	0.557	0.604	0.648	0.691	0.705	0.733	0.773	0.814	0.840	0.853
30°	0.461	0.505	0.549	0.596	0.613	0.648	0.705	0.770	0.819	0.845
35°	0.353	0.400	0.448	0.500	0.518	0.557	0.623	0.699	0.757	0.788
40°	0.250	0.296	0.346	0.400	0.420	0.461	0.531	0.610	0.670	0.702
45°	0.166	0.200	0.243	0.295	0.315	0.357	0.429	0.511	0.571	0.602

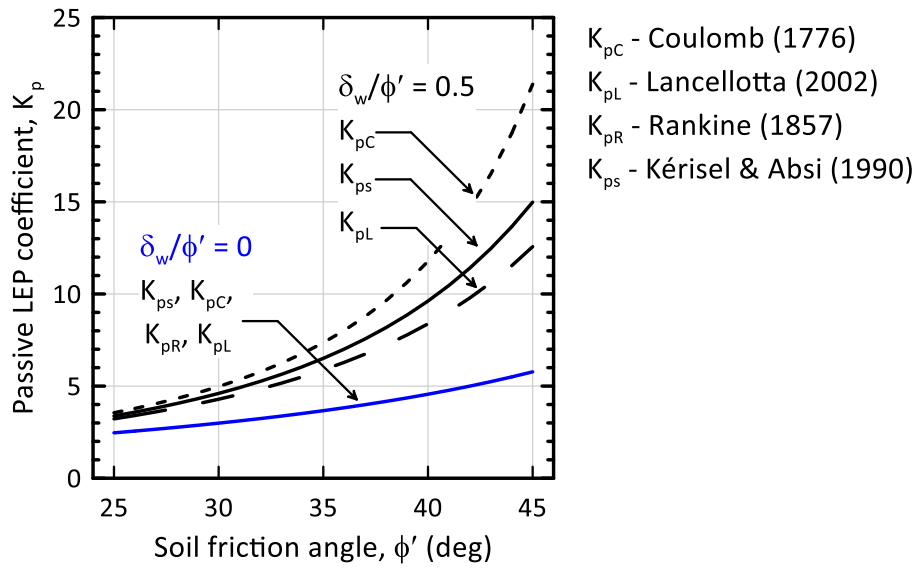

Figure 3.7. Comparison of passive LEP coefficients

Comparisons of the passive LEP coefficients using the Coulomb (K_{pC}), Lancellotta (K_{pL}), Rankine (K_{pR}), and Kérisel & Abis (K_{ps}) are shown in Figure 3.7. For $\delta_w/\phi' = 0$ (no wall friction) all methods are the same. The K_p values increase with increasing δ_w/ϕ', with the Lancellotta (2002) method based on the lower bound theorem, being the smallest. The Coulomb approach generally results in the passive force being too high (≈ 15-20%) with respect to the log spiral approach. This report uses the log spiral method with the Kérisel & Abis (1990) LEP coefficients.

The forces acting on the passive side of the block are given in terms of the surcharge and weight stresses, σ_{ps} and $\sigma_{p\phi}$, respectively, times the net area of the block face. These forces are given in Eqn. 3.4 as:

$$
\begin{aligned}
P_{ps} &= \sigma_{ps}\left(A_b\right)_{net} = K_{ps}q_s\left(A_b\right)_{net} = \left(K_{ps}\gamma_t H_s\right)\left(A_b\right)_{net} \\
P_{p\phi} &= \sigma_{p\phi}\left(A_b\right)_{net} = ½K_{ps}\gamma_t H_b\left(A_b\right)_{net} \\
\left(A_b\right)_{net} &= H_b \times B_b - \left[A_{pipe} = \pi\left(OD\right)^2/4\right]
\end{aligned}
\tag{3.4}
$$

3.3.3. Tabulated active and passive lateral earth pressure coefficients

There are many variables described in the preceding section, and several figures providing values for these variables. In most cases, the independent variable is the soil effective stress friction angle, ϕ'. The method used to determine LEPs can be based on many approaches. The active and passive LEP coefficients are given in Table 3.3 for several approaches and various δ_w/ϕ' values.

Table 3.3. Active and passive LEP coefficients[a]

ϕ' (deg)	Rankine		Coulomb			
	Active	Passive	Active, K_{aC}		Passive, K_{pC}	
	K_{aR}	K_{pR}	$\delta_w/\phi' = 0$	$\delta_w/\phi' = ½$	$\delta_w/\phi' = 0$	$\delta_w/\phi' = ½$
25	0.41	2.46	0.41	0.36	2.46	3.55
26	0.39	2.56	0.39	0.34	2.56	3.79
27	0.38	2.66	0.38	0.33	2.66	4.04
28	0.36	2.77	0.36	0.32	2.77	4.33
29	0.35	2.88	0.35	0.30	2.88	4.63
30	0.33	3.00	0.33	0.29	3.00	4.98
31	0.32	3.12	0.32	0.28	3.12	5.35
32	0.31	3.25	0.31	0.27	3.25	5.77
33	0.29	3.39	0.29	0.26	3.39	6.24
34	0.28	3.54	0.28	0.25	3.54	6.77
35	0.27	3.69	0.27	0.23	3.69	7.36
36	0.26	3.85	0.26	0.22	3.85	8.02
37	0.25	4.02	0.25	0.21	4.02	8.78
38	0.24	4.20	0.24	0.21	4.20	9.64
39	0.23	4.40	0.23	0.20	4.40	10.63
40	0.22	4.60	0.22	0.19	4.60	11.77
41	0.21	4.81	0.21	0.18	4.81	13.10
42	0.20	5.04	0.20	0.17	5.04	14.66
43	0.19	5.29	0.19	0.16	5.29	16.51
44	0.18	5.55	0.18	0.15	5.55	18.71
45	0.17	5.83	0.17	0.15	5.83	21.38

a - Wall back slope angle (α = 90° = vertical), backfill slope angle (β = 0° = horizontal)

Table 3.3. Active and passive LEP coefficients (completed)[a]

ϕ' (deg)	Passive					
	K_{ps}[b]					K_{pL}[c]
	$\delta_w/\phi' = 0$	$\delta_w/\phi' = ⅓$	$\delta_w/\phi' = ½$	$\delta_w/\phi' = ⅔$	$\delta_w/\phi' = 1$	$\delta_w/\phi' = ½$
25	2.44	3.10	3.39	3.66	4.34	2.44
26	2.56	3.26	3.63	4.04	4.93	2.56
27	2.68	3.43	3.87	4.40	5.43	2.68
28	2.80	3.61	4.11	4.74	5.88	2.80
29	2.91	3.80	4.37	5.09	6.31	2.91
30	3.02	4.01	4.64	5.44	6.75	3.02
31	3.14	4.23	4.93	5.82	7.23	3.14
32	3.26	4.48	5.25	6.23	7.77	3.26
33	3.39	4.76	5.60	6.69	8.42	3.39
34	3.52	5.06	6.00	7.20	9.19	3.52
35	3.66	5.39	6.45	7.78	10.12	3.66
36	3.81	5.76	6.95	8.45	11.25	3.81
37	3.97	6.16	7.52	9.20	12.59	3.97
38	4.14	6.60	8.15	10.06	14.19	4.14
39	4.32	7.08	8.85	11.04	16.06	4.32
40	4.52	7.61	9.64	12.14	18.25	4.52
41	4.74	8.18	10.51	13.38	20.78	4.74
42	4.97	8.80	11.47	14.77	23.69	4.97
43	5.22	9.48	12.54	16.32	27.00	5.22
44	5.50	10.21	13.71	18.05	30.74	5.50
45	5.79	11.00	14.99	19.96	34.94	5.79

a - Wall back slope angle (α = 90° = vertical), backfill slope angle (β = 0° = horizontal)

b - Kérisel & Abis (1990) - log spiral (recommended)

c - Lancellotta (2002) – lower bound theorem

Table 3.4. Final thermal stresses for *Typical* and *Best Practices* construction [after Stewart and Bilgin (2020)]

Temperature zone	*Typical* construction Final thermal stress, σ_T	*Best Practices* construction Final thermal stress, σ_T
Warm	255 psi	110 psi
Moderate	290 psi	150 psi
Cold	300 psi	180 psi

3.3.4. Thermal and Poisson forces, F_T and F_ν

The thermal and Poisson forces are the same as described in Section 2. "*Best* construction" is recommended for the anchor block installations, unless otherwise warranted. The thermal stress for this condition is given in Table 3.4.

The thermal force is the thermal stress multiplied by the pipe wall area, and is given as:

$$F_T = \sigma_T A_{wall} \tag{3.5}$$

The Poisson force, F_ν, is generated by the internal pressure. Two approaches are used in this report. The first, and most conservative, is to use the full (100%) WP along with an additional 100% WP for an occasional surge pressure, i.e., P_{OS} = 1.0×PC. Recognizing that these pipe pressures may overestimate the operational characteristics of the pipeline, an alternative approach is to use ⅔ the WP along with an additional ⅔WP for the occasional surge. The two design internal pressures are given in Table 3.5.

Table 3.5. Design internal pressures for PE4710

Pipe DR	100% Working Pressure, WP based on Pressure Class, PC	⅔ Working Pressure, WP based on Pressure Class, PC
9	250 psi	167 psi
11	200 psi	133 psi
13.5	160 psi	107 psi
17	125 psi	83 psi

The pressure-induced hoop stress is given by:

$$\sigma_\theta = \frac{p(DR-1)}{2} = \frac{p(OD-t)}{2\,t} \tag{3.6}$$

and the Poisson force, F_ν, resulting from the pressure-induced hoop stresses is given by:

$$F_\nu = \left[\left(\nu_{long}\left(\sigma_\theta\right)_{WP} + \nu_{short}\left(\sigma_\theta\right)_{P_{OS}}\right)\right]A_{wall} \tag{3.7}$$

As given previously in Section 2, the hoop stress from the working pressure is limited to HDS = 1,000 psi. When the occasional surge pressure is equal to WP, then the hoop stress from the occasional surge pressure also is 1,000 psi. The combined axial stress due to a) the worst case thermal stress (*Typical* construction, *Cold* temperature zone) of σ_T = 300 psi, plus b) (ν_{long} = 0.45)(1,000 psi), plus c) (ν_{short} = 0.35)(1,000 psi) is 1,100 psi. This is well below a conservative level of an HDPE yield stress of 3,000 psi.

The PPI Handbook (2008) recognizes that the wall thickness used to determine the hoop stress in Eqn. 3.6 is the minimum allowable wall thickness, which will maximize the calculated hoop stress, which is conservative. The PPI Handbook (2008) and AWWA Manual M55 (2020) recommend `increasing the average wall thickness, t_a by 6% for hydraulic design. This report does not increase the wall thickness above that given in AWWA M55 Appendix E (2020). Increasing the wall thickness would have several effects: 1) the hoop stress determined in Eqn. 3.6 would decrease by about 6%, 2) the calculated hoop stress would no longer be the hydrostatic basis stress, HDS = 1000 psi for PE 4710, 3) the Poisson force, F_ν, would decrease by slightly more than 1%, and 4) any equations based on stresses calculated using dimension ratio, DR, would no longer apply.

3.4. Three-dimensional effects

Ovesen (1964) and Brinch Hansen (1966) presented methods to modify earth pressures to account for three-dimensional effects such as those that develop with a single block. The magnification to account for 3-D effects is given in Eqn. 3.13, with the notation changes used by Mokwa (1999) and Duncan and Mokwa (2001). The Ovesen notations include dimensionless variables h/H, ℓ/L, and ℓ/h, which also are given in Eqn. 3.13. The anchor block geometry for 3-D effects for blocks with limited height and width is shown in Figure 3.8.

$$M = 1 + \left(K_{ps} - K_{aC}\right)^{2/3} \left(1.1E^4 + \frac{1.6B}{1 + 5\frac{B_b}{H_b}} \right) + \frac{0.4\left(K_{ps} - K_{aC}\right)E^3B^2}{1 + 0.05\frac{B_b}{H_b}}$$

$$E = 1 - \frac{H_b}{H_s + H_b} = 1 - \frac{h}{H}$$

$$B = 1 - \left(\frac{B_b}{L}\right)^2 = 1 - \left(\frac{\ell}{L}\right)^2 \tag{3.13}$$

For a single block B = 1 and

$$M = 1 + \left(K_{ps} - K_{aC}\right)^{2/3} \left(1.1E^4 + \frac{1.6}{1 + 5\frac{\ell}{h}} \right) + \frac{0.4\left(K_{ps} - K_{aC}\right)E^3}{1 + 0.05\frac{\ell}{h}}$$

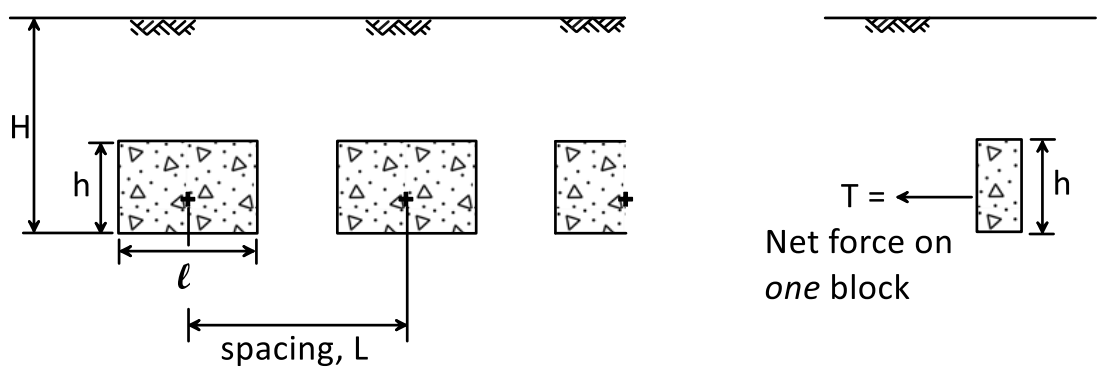

Figure 3.8. Anchor block geometry for 3-D effects [after Ovesen (1964)]

Mokwa (1999) used passive K_p values based on the results of a composite Rankine-log spiral solution. The active K_a used was that based on Rankine theory, K_{aR}, because the log spiral and Rankine (and Coulomb for $\delta_w = 0$) active failure surfaces are about the same, as are the resulting K_a values for $\delta_w = 0$. This has a bit of inconsistency if the Rankine-log spiral method includes any wall friction, because the passive anchor force is inclined. The Rankine active K_{aR} does not consider wall friction, so the active anchor in Mokwa's formulation is always horizontal.

This report uses K_{aC} for the active value and K_{ps} for the passive value in Eqn. 5, both of which include wall friction. This gives contributions on both the active and passive sides of the anchor block that have inclinations as shown in Fig. 3.4. Figure 3.9 shows the variation in 3-D magnification factor, M, with friction angle for square blocks ($B_b/H_b = \ell/h = 1$). The magnification

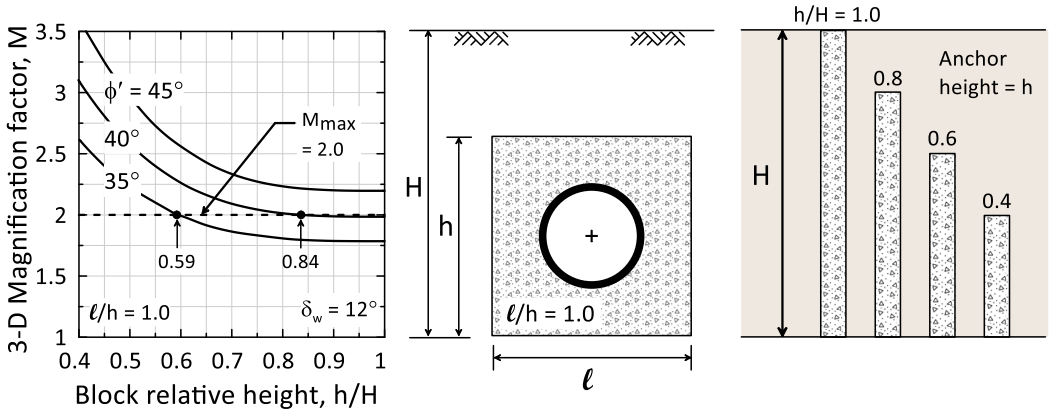

Figure 3.9. Magnification factor vs. relative height for square anchor blocks

factor also varies with δ_w, since K_{aC} and K_{ps} depend on δ_w. Figure 3.9 uses an average δ_w of 12°. Also shown in the figure are the geometry notations for the blocks and the scale for different h/H. When h/H = 1, the top of the block is at the soil surface so $H_s = 0$. Since the height of soil cover for the block sizes in this report is always at least 2 ft, the blocks never have h/H =1, and it is in the figure only to show M over the full range. The largest effect on anchor magnification is the relative depth of the anchor, h/H. This also reflects the effect of the soil cover above the anchor. As the relative height, h/H, approaches one, the magnification factor approaches a limiting value which depends on the soil friction angle. For dense backfill and small h/H the magnification factors are very high. The magnification factor used in this report when sizing the anchor blocks is limited to a maximum value of $M_{max} = 2.0$. For soil friction angles of $\phi' = 35$ and 40° the h/H value for $M_{max} = 2.0$ is shown.

In this report, the magnification factor is applied to both the active and passive forces. Breaking out the ultimate active and passive forces separately, the magnified active and passive forces are:

$$F_a = M \times \left(P_{as} + P_{a\phi}\right) = M \times P_a \qquad \text{a)}$$
$$F_p = M \times \left(P_{ps} + P_{p\phi}\right) = M \times P_p \qquad \text{b)} \qquad (3.14)$$

The expressions for the forces given in Eqn. 3.14 take into account the net block face area (see Eqns. 3.3a and 3.4).

3.5. Factor of safety for capacity

The Factor of Safety against exceeding the ultimate passive capacity, FS_{cap}, is defined in terms of the lateral component of the passive force, which is the *capacity*, and the total lateral *demand* consisting of the lateral component of the active force, the thermal force, and the Poisson force. The recommended minimum FS_{cap} is 1.5, but this can be set by the design engineer. This FS_{cap} is given by:

$$FS_{cap} = \frac{\text{Ultimate lateral passive } \textit{capacity}}{\text{Lateral driving } \textit{demand}}$$
$$FS_{cap} = \frac{M\left(P_{ps} + P_{p\phi}\right)\cos\delta_w}{F_T + F_v + M\left(P_{as} + P_{a\phi}\right)\cos\delta_w} \tag{3.15}$$

3.6. Additional considerations for block forces

3.6.1. Frictional shear forces along block T_{top}, T_{base}, and T_{side}

There will be shear forces along the top, base, and sides of the concrete anchor blocks resulting from the lateral and upward movement of the anchor block. These forces depend on the soil in contact with the block and the interface friction angle between the soil and anchor block.

<u>Top shear force, T_{top}</u>

The top shear force on the anchor block is affected by the weight of the soil, W_s, above the block. If there is relative motion between the soil and top of the block, this shear force is given by:

$$\begin{aligned} T_{top} &= W_s \tan\delta_{top} = \left(B_b \times L_b \times H_s\right)\gamma_t \tan\delta_{top} \\ &= \text{surcharge } q_s \times \left(B_b \times L_b\right)\tan\delta_{top} \end{aligned} \tag{3.16}$$

in which:

δ_{top} = interface friction ratio between the top of the wall and the soil,
ϕ' = soil friction angle, and
γ_t = soil unit weight.

The recommended value would be δ_{top} = (0.7 to 1.0) ϕ' for soil along the unfinished top of the concrete block.

Base shear force, T_{base}

The base shear force is affected by the weight of the soil, W_s, above the block, the weight of the concrete block, W_b, and the vertical components of the active and passive forces. This force is given by:

$$\begin{aligned} W_s &= \left(H_s \times B_b \times L_b\right)\gamma_t \\ W_c &= \left(H_b \times B_b \times L_b\right)\gamma_c \\ &\quad \left[-\gamma_c\left(\text{volume of pipe inside of block}\right) + \left(W_{pipe} + W_{water}\right)\text{inside the block}\right] \\ T_{base} &= \left[W_s + W_c - F_p \sin\delta_w + F_a \sin\delta_w\right]\tan\delta_{base} \end{aligned} \tag{3.17}$$

The recommended value would be $\delta_{base}/\phi' \approx (0.7 - 0.8)$ for soil along the base of the concrete anchor block. This high interface friction ratio is for mass concrete poured on rough ground. Base friction is affected by the upward component of the passive thrust and the downward components of the active forces because of the wall fiction angle, δ_w. The weights of the concrete anchor and the soil above it increase the normal force at the base of the anchor. If the net upward force acting on the base is less than zero, the base friction would be set to zero.

Side shear forces, T_{side}

$$T_{side} = F_h \tan\delta_{side} = \underbrace{\left\{\underbrace{\left(H_s + \frac{H_b}{2}\right)\gamma_t K_{soil}}_{\text{Avg. horiz. stress}} \times H_b \times L_b\right\}}_{F_h}\tan\delta_{side} \tag{3.18}$$

The sides of the anchor block will be cut into the native soil trench wall or in the compacted backfill, and likely have no form work. The wall friction angle would be for mass concrete placed directly against the rough soil. An estimate of the side shear is complicated because the coefficient of lateral soil stress, K_{soil}, is needed in Eqn. 3.18.

Friction effects

Evaluations of the friction effects on 8, 12, 18, and 24 DIPS pipe, with full WP and P_{OS} in a cold temperature zone were made. The block sizes, given in each of the separate figures below in Figure 3.10 were kept constant for the range of depths considered. Dense soil conditions were used and

the top, base and side interface friction angles were 26°. The thickness of the block was 1 ft.

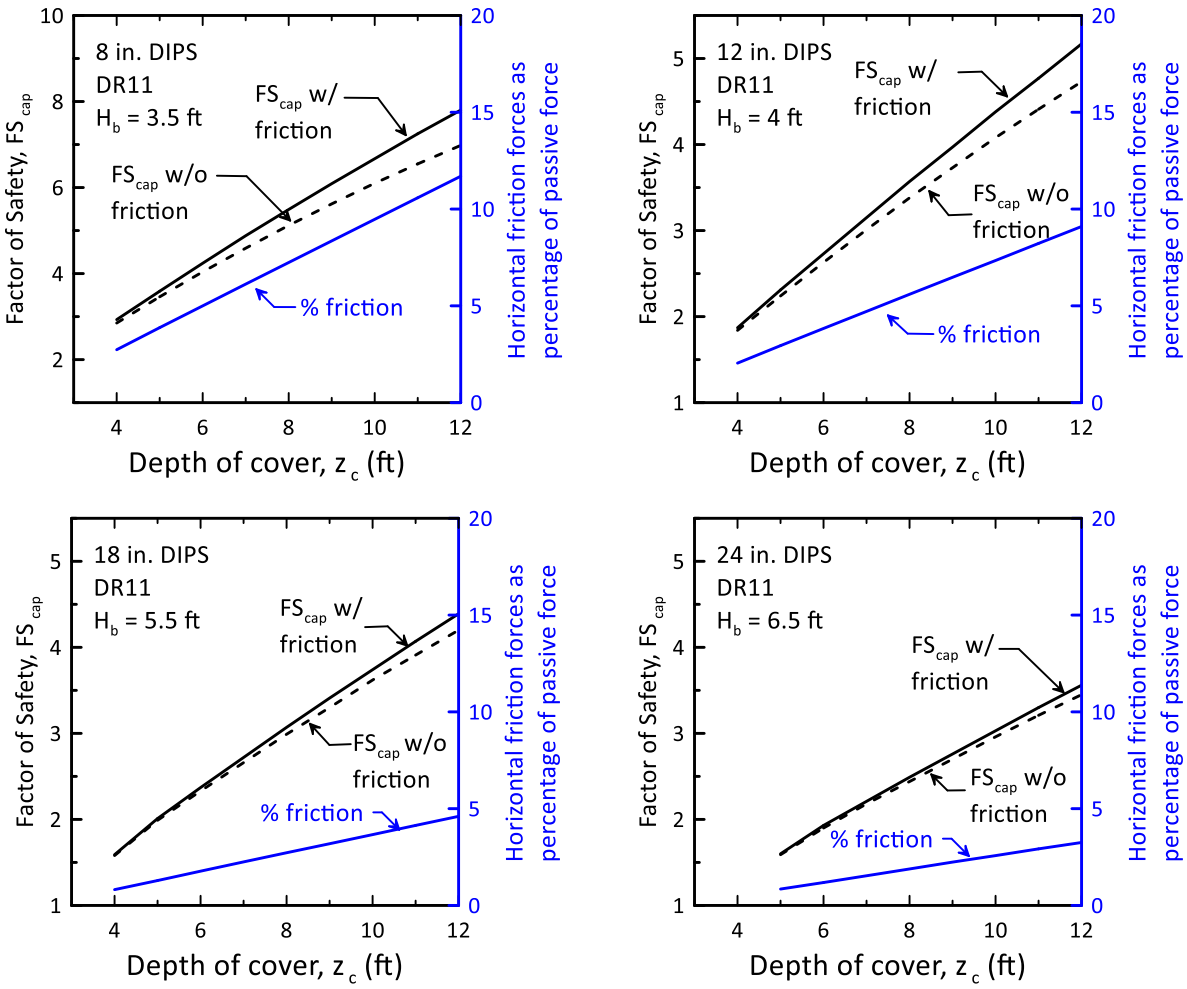

Figure 3.10. Block/Soil friction effects for different pipe and block sizes

Figure 3.10 shows the effects of the block friction expressed by the factor of safety against exceeding the soil lateral capacity, FS_{cap}. The FS_{cap} with friction and that without friction are given in Eqn. 3.19a and 3.19b, where the friction forces are included in the denominator of the "with friction" equation.

With friction:

$$FS_{cap} = \frac{M\left(P_{ps} + P_{p\phi}\right)\cos\delta_w + \overbrace{\boxed{T_{top} + T_{base}(\text{if } F_v > 0) + \left(2T_{soil\,side}\right)_{horiz.} + \left(2T_{block\,side}\right)_{horiz.}}}^{\text{Friction components}}}{F_T + F_v + M\left(P_{as} + P_{a\phi}\right)\cos\delta_w} \tag{3.19a}$$

Without friction:

$$FS_{cap} = \frac{M\left(P_{ps} + P_{p\phi}\right)\cos\delta_w}{F_T + F_v + M\left(P_{as} + P_{a\phi}\right)\cos\delta_w} \tag{3.19b}$$

The top, base, and side shears are included in the "capacity" term of the forces acting on the block, in the numerator of the equation for $FS_{cap.}$ Friction increases the FS_{cap} by a very small amount. Friction increases with pipe depth, because the normal stresses on the block faces are larger, but still remains a relatively small percentage (as shown on the blue vertical axes in Figure 3.10) of the overall lateral capacity.

These frictional forces are not considered in this methodology because they have a negligible effect on the resulting anchor block capacity. They do not affect the final block sizes required to resist the applied forces with a tolerable displacement. The top and side shears are generally only a few percent of forces resisting block movement. In addition, these frictional forces contribute to capacity and not including them is conservative.

3.6.2. Block horizontal and vertical forces

The magnified active and passive forces, F_a and F_p, acting on the block are inclined at the angle of wall friction, δ_w, as previously indicated in Figure 3.4. The horizontal and vertical components of the forces are given in Eqn. 3.20.

$$\begin{aligned} &\text{Horizontal:} && \text{Vertical:} \\ &F_{ah} = M\left(P_{as} + P_{a\phi}\right)\cos\delta_w && F_{av} = M\left(P_{as} + P_{a\phi}\right)\sin\delta_w\ (\text{downward}) \\ &\quad\text{and} && \quad\text{and} \\ &F_{ph} = M\left(P_{as} + P_{a\phi}\right)\cos\delta_w && F_{pv} = M\left(P_{as} + P_{a\phi}\right)\sin\delta_w\ (\text{upward}) \end{aligned} \tag{3.20}$$

The horizontal components are used in the FS_{cap}. The magnification factors increase the forces substantially, which greatly increases the capacity. The *mobilized* horizontal force cannot exceed the driving demand of the thermal force, F_T, the Poisson force, F_v, and the active thrust, F_{pv}. The active thrust is fully mobilized since the displacement to develop the active force is an order of magnitude smaller than that necessary to develop the passive resistance. The vertical (upward) component of the passive thrust plus the vertical component of the active thrust (downward) cannot exceed the weight of the soil overlying the block, W_s, plus the weight of the anchor block, W_b. Side

shears on the soil and block are not included, as explained in Section 3.6.1. In the LEP method, the wall friction angle, δ_w, is adjusted so that the sum of the vertical passive and active earth forces does not exceed the gravity forces due to W_s plus W_b. The result of this is that the mobilized horizontal and vertical forces are in equilibrium, and the FS_{cap} is on the full capacity horizontal component.

The steps in the procedure are as follows.

1) Set the mobilized horiz. $= \left(F_{ph}\right)_{mob} = F_T + F_v + F_{ah}$,
2) Calculate the inclined $\left(F_p\right)_{mob} = \left(F_{ph}\right)_{mob} / \cos\delta_w$ and vertical $\left(F_{pv}\right)_{mob} = \left(F_p\right)_{mob} \sin\delta_w$,
3) Calculate the sum of the vertical earth forces, $\Sigma = \left(F_{pv}\right)_{mob} - F_{av}$,
4) Vary δ_w until this Σ of the vertical earth forces is less than $\left(W_s + W_b\right)$.

This results in a wall friction angle, δ_w, substantially less than this given in Table 3.1. Even without the magnification factor, the uplift component of the passive earth force can be large. A reasonable starting estimate for the mobilized wall friction would be $\delta_w = 12 \pm 5°$.

3.7. Anchor block displacements

The anchor block displacement, δ_b, is limited to the maximum permissible joint displacement, δ_j, so that $\delta_b \leq \delta_j$. This allowable movement can be very small (< a few 0.01^{ths} in.) for weak, lead- or cement-caulked cast iron joints or very large (> 3 in.) for ductile iron or PVC joints specially designed to accommodate permanent ground movements due to earthquakes or subsidence. Communications with professional industry representatives has indicated that for routine design connection into PVC segmented pipes, the allowable joint opening could be as much as 0.75 in. (0.19 mm.) Ductile iron (DI) movements for piping with ordinary push-on joints could be 0.6 in., depending on pipe size.

The movements necessary to mobilize active and passive earth pressures can be found in several sources, and can differ substantially. Table 3.6 lists normalized wall movements, Y/H, necessary to develop these full earth pressures. The data upon which the table values have been derived come from several sources, and have been summarized in the tables. Note that the wall displacements necessary to mobilize the full active forces are an order of magnitude smaller than those required

Table 3.6. Wall movements to develop full active and passive pressures in cohesionless soil

Backfill type	Clough and Duncan (1991)		Briaud (2013)	
	Active Y_a/H	Passive Y_p/H	Active Y_a/H	Passive Y_p/H
Loose sand	0.004	0.04	0.003 to 0.005	0.03 to 0.05
Medium dense sand	0.002	0.02	0.002 to 0.0035 (interpolated)	0.02 to 0.04 (interpolated)
Dense sand	0.001	0.01	0.001 to 0.002	0.01 to 0.03

for the passive forces. For the case of anchor blocks with both active and passive pressures, the active thrust will be fully mobilized well before the full passive thrust is developed.

Figure 3.11 shows the movements, Y, as a function of wall height, H, for the conditions given in Table 3.6. The average values given in Table 3.6 from the two referenced sources are in reasonable agreement, but the Briaud (2013) values show a considerable range. Thus, the selection of a single value for anchor design purposes has some uncertainty. For the range of passive displacements shown in the lower right figure of Figure 3.11, the lower range for medium dense sands overlaps the upper range for dense sands.

The movement can be the rotation of the top of the wall if the wall rotates about the base or the lateral translation of the wall. If Y from Figure 3.11 is the lateral translation of the anchor block, this should be "approximately equivalent" to the rotational displacement to mobilize the full passive resistance (NAVFAC, 1986). Given the range of Y to mobilize the pressures, the interchangeability of the translational and rotational movements is quite reasonable. In addition, the relationships in the figures likely was developed for relatively tall walls or sheeting that may rotate more readily than short, stubby anchor blocks.

The wall movement necessary to develop the full passive pressure/resistance for an anchor block height of 5 ft in a medium dense soil could be (0.01 to 0.03)(5 ft) 12 in./ft) = 0.6 to 1.8 in. The displacement limits to fully mobilize the anchor block active forces is much less than this, perhaps 1/10 of that required for the passive pressure. For the sizing of blocks in this report, the normalized displacement values recommended to develop full passive pressure are given in Table 3.7.

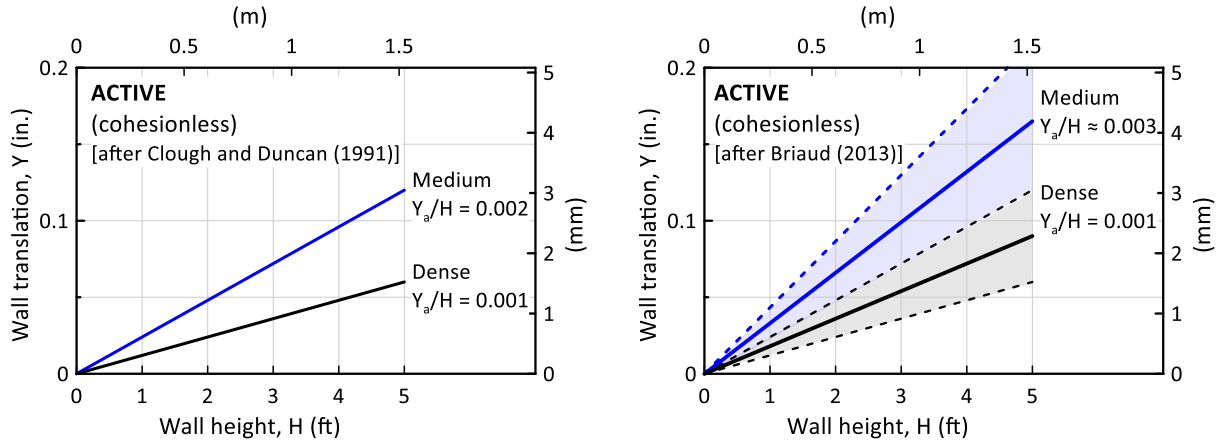

a) Active wall movements

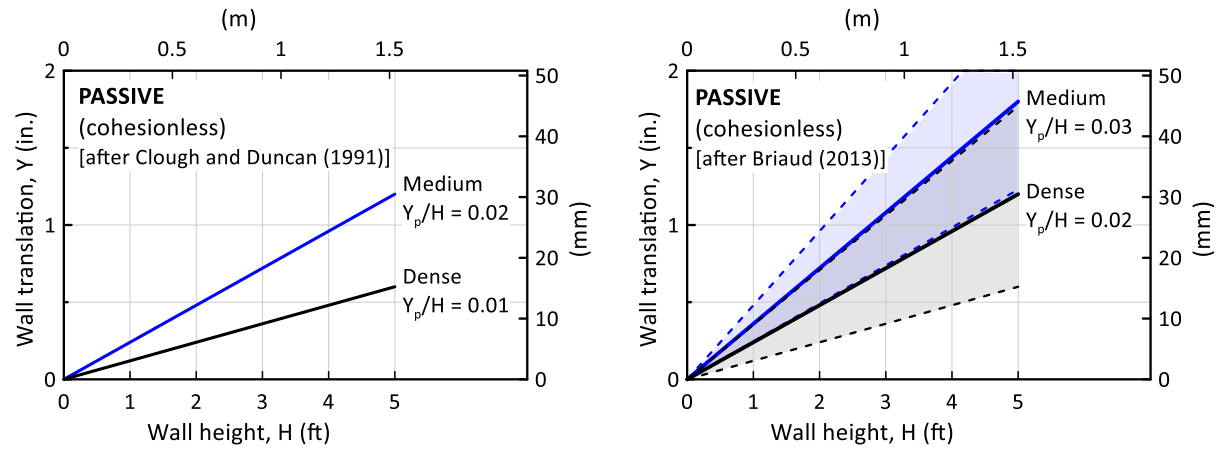

b) Passive wall movements

Figure 3.11. Wall rotations for full active and passive pressures

Table 3.7. Recommended values for normalized displacement to develop full passive pressure

Physical state of compacted backfill	Y_p/H_b for full passive pressure development
Loose	Not recommended
Medium dense	0.03
Dense	0.02
Very dense	0.01

These values are greater than the Clough and Duncan (1991) values, and may represent a more conservative estimated displacement. Two approaches can be used to estimate displacement of the block given the demand forces. These are described in the following section.

3.7.1. Linear displacement model

For this block displacement model assume that the anchor block displacement is linear with a slope of F_{ph}/Y_p, up to the horizontal passive capacity. F_{ph} is the lateral capacity of the block and Y_p is the block displacement at this capacity. The displacement that develops for a given applied (demand) force is proportioned within this linear range. This linear approach is shown in Figure 3.12 for a 4-ft-square anchor block in a medium dense soil that has a capacity of $F_{ph} \approx 72.9$ kips. The lateral demand is $F_{Dh} \approx$ 48.1 kips and the estimated $FS_{cap} \approx$ (Capacity = F_{ph})/(Demand = F_{Dh}) = 1.52. Using a linear displacement model, the estimated block displacement, $\delta_{b\ell}$, is:

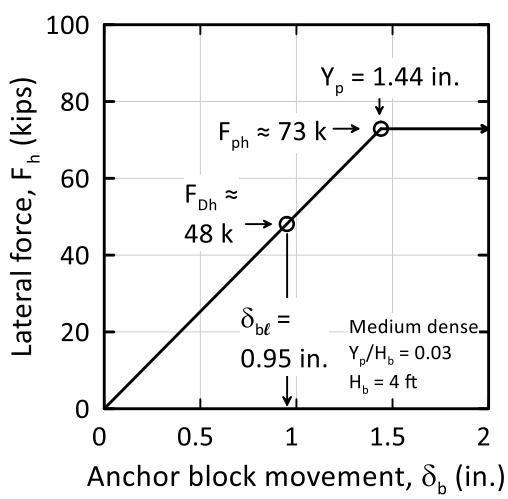

Figure 3.12. Displacements using linear model

$$Y_p = \text{Displacement to develop full passive capacity}$$

$$\frac{Y_p}{H} = \frac{\delta_b}{H_b} = 0.03 \text{ for medium dense} \Rightarrow Y_p = 0.03\left(H_b = 4\text{ ft}\right)\frac{12\text{ in.}}{\text{ft}} = 1.44\text{ in.}$$

$$\text{By proportion:} \tag{3.21}$$

$$\frac{F_{ph} \approx 72.9\text{ kips}}{F_{Dh} \approx 48.1\text{ kips}} = FS_{cap} = 1.52 = \frac{Y_p = 1.44\text{ in.}}{\delta_{b\ell}}$$

$$\therefore \delta_{b\ell} = \frac{Y_p}{FS_{cap}} = \frac{1.44\text{ in.}}{1.52} \approx 0.95\text{ in.}$$

In this example, the block movement is 0.95 in., which is unacceptable for an allowable joint opening of the attached segmented pipe of δ_j = 0.50 in. Even though the size is adequate (barely) in terms of capacity, the predicted movement using this simple linear model is too large.

3.7.2. Hyperbolic displacement model

To introduce nonlinearity in the wall force-displacement relationship, a model with a hyperbolic shape is used. This model formulation is used frequently in geotechnical engineering Figure 3.13 shows a basic hyperbolic model, with x-y axes. This model has only a few parameters, which is one of the reasons for its popularity.

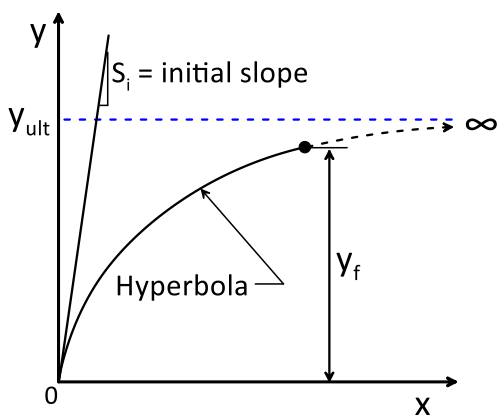

$$y = a + bx = \frac{x}{\left(a = \frac{1}{S_i}\right) + \left(b = \frac{1}{y_{ult}}\right)x}$$

$$R_f = \frac{y_f}{y_{ult}} \qquad y = \frac{x}{\frac{1}{S_i} + R_f \frac{x}{y_f}}$$

Figure 3.13. Basic hyperbolic model

The two key parameters are:

1) The hyperbola has in initial slope, S_i. The parameter a = $1/S_i$.
2) The hyperbola is asymptotic to y_{ult} at infinite x. The parameter b = $1/y_{ult}$.

The hyperbolic shape predicts an ultimate value, y_{ult}, which is greater than the actual value of y at the failure condition, y_f, shown by a solid symbol on Figure 3.13. A reduction factor is introduced where $R_f = y_f/y_{ult}$ to better fit measured data. Frequently, $R_f \approx 0.75 - 0.85$ for many hyperbolic curves used in geotechnical engineering. This form for the shape of curve is used in a variety of geotechnical applications. Table 3.8 lists a few applications, along with typical nomenclature.

Table 3.8. Geotechnical applications of hyperbolic curves

Application	Initial slope	Ultimate value	Failure value
Soil uniaxial stress-strain, $(\sigma_1 - \sigma_3) - \varepsilon_{axial}$	Initial Young's modulus, E_i or E_{max}	$(\sigma_1 - \sigma_3)_{ult}$	$(\sigma_1 - \sigma_3)_f$
Soil shear stress-strain, $\tau - \gamma$	Initial shear modulus, G_i or G_{max}	τ_{ult}	τ_f
Pipe or pile lateral loading, P-y	Initial stiffness, k_{max}	P_{ult}	P_f

The basic hyperbolic model used here is given by:

$$F_h = \frac{\delta_b}{a + b\delta_b} = \frac{\delta_b}{\left(a = \frac{1}{k_{max}}\right) + \left[b = \frac{1}{(F_p)_{ult}}\right]\delta_b} = \frac{\delta_b}{\frac{1}{k_{max}} + R_f \frac{\delta_b}{F_{ph}}} \tag{3.23}$$

in which:

a = the hyperbolic parameter $=1/k_{max}$,

k_{max} = initial slope of the F_h - δ_b relationship,

b = the hyperbolic parameter $= \frac{1}{(F_p)_{ult}} = \frac{1}{F_{ph}/R_f} = \frac{R_f}{F_{ph}}$,

R_f = hyperbolic reduction factor,

F_h = the lateral force at a given block displacement,

F_{ph} = calculated anchor block passive lateral resistance (*capacity*), and

$(F_p)_{ult}$ = hyperbolic asymptotic limit of the passive force .

The approach in this report is similar to the hyperbolic model described above, with three important, yet straightforward modifications that conveniently link displacements to the factor of safety. The three modifications used in this application for anchor blocks are:

1) The hyperbolic model *must* meet the calculated (F_{ph} -Y) point,

2) Take the initial slope, k_{max}, be a multiple, X (capital chi), of the slope used in the linear model, $k_f = F_{ph}/Y_p$. This means that:

$$k_{max} = Xk_f = X\left(\frac{F_{ph}}{Y_p}\right) \tag{3.24}$$

3) Limit the hyperbolic relationship to a maximum of F_{ph} at the (F_{ph}-Y_p) point, rather than continue along a hyperbolic curve towards an asymptotic limit $(F_u)_{ult}$.

These conditions impose limits on the hyperbolic parameters that can be used. These limits require that:

$$X = \frac{1}{1-R_f} \text{ or } R_f = \frac{X-1}{X} \tag{3.25}$$

The final hyperbolic relationship for anchor blocks is:

$$F_h = \frac{\delta_b}{\frac{1}{Xk_f} + R_f \frac{\delta_b}{F_{ph}}} \tag{3.26}$$

Eqn. 3.26 can be rearranged so that given a force, the anchor block displacement can be determined. The force, F_h, in Eqn. 3.26 at which we want to find the displacement is the lateral *demand*, F_{Dh}, and the force, F_{ph} is the lateral *capacity*. Rearranging Eqn. 3.26 gives the hyperbolic displacement, δ_{bh}, in terms of the FS_{cap} = Capacity/Demand, and the hyperbolic parameters X and R.

$$\delta_{bh} = \frac{F_{Dh}Y_p}{X\left(F_{ph} - R_f F_{Dh}\right)} = \frac{Y_p}{X\left(\frac{F_{ph}}{F_{Dh}} - R_f\right)} = \frac{Y_p}{X\left(FS_{cap} - R_f\right)} \tag{3.27}$$

When using the three hyperbolic modifications, the factor $X = f(R_f)$ controls the initial stiffness and curvature of the F_{ph} - δ_b relationship. The point where all the curves meet is at the ultimate capacity and displacement at that capacity. The displacement at the capacity is the Y_p/H values for mobilizing full passive capacity from Table 3.6. Figure 3.14 shows lateral force, F_h, vs. δ_b for several combinations of R_f and X. The linear force-displacement relationship described previously also can be given the parameters $R_f = 0$ and $X = 1$. Figure 3.15 shows the fundamental hyperbolic relationship for these values of R_f and X for the same lateral capacity and demand, $F_{ph} \approx 73$ kips and $F_{Dh} \approx 48$ kips, respectively, block size, and medium density soil conditions used in the linear model example. The hyperbolic block displacement is $\delta_{bh} = 0.40$ in., which would be compared to the tolerable joint opening for the attached segmented pipeline.

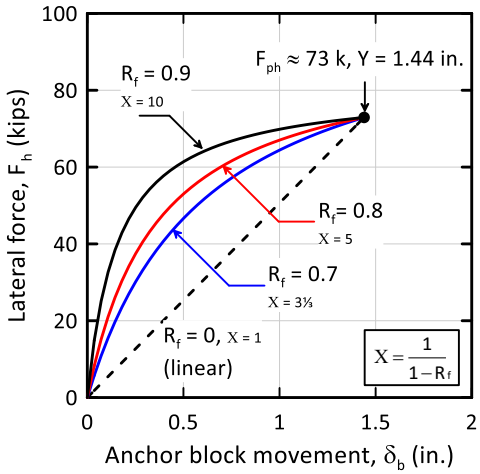

Figure 3.14. General shapes of modified hyperbolic force-displacements relationships

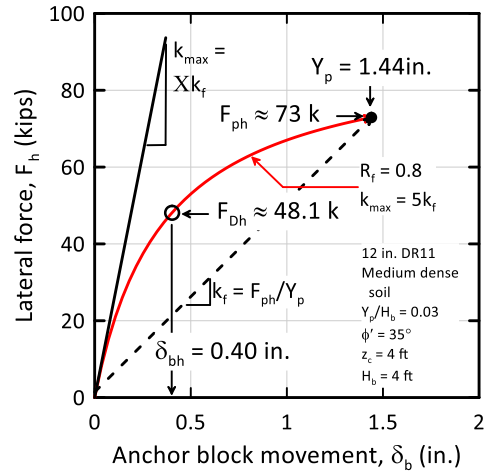

Figure 3.15. Displacements using hyperbolic model

3.8. Field test comparison

There are few full-scale field test results for anchor block capacities. Duncan and Mokwa (1991) present results for a concrete anchor block having dimensions of H_b = 3.5-ft-high × B_b = 6.3-ft-wide × L_b = 3-ft-thick, having a weight of W_c = 9.9 kips. The soil on the passive block face was a compacted, crusher-run gravelly backfill with a unit weight of γ_t = 135 pcf and an estimated effective stress friction angle of $\phi' \approx$ 48-52°. This would be a very dense backfill. The LEP methodology outlined in this report was used to calculate the passive capacity and lateral force-displacement for the block. The wall friction using the LEP approach was $\delta_w \approx 8°$ to maintain zero uplift force (see Section 3.6.2), whereas the value used by Duncan and Mokwa was $\delta_w \approx 6°$.

Figure 3.16 shows the comparison of the calculated LEP method passive lateral capacity, F_{ph}, the full hyperbolic displacement curve [extending beyond the (F_{ph},Y_p) point, which is shown by the red solid triangle)] using the parameters shown on the figure, and the measured field data. The design methodology has a limiting value of F_{ph} = 72.9 kips and a shape factor of R_f = 0.875 was used in the figure. The fit to the measured data is very good.

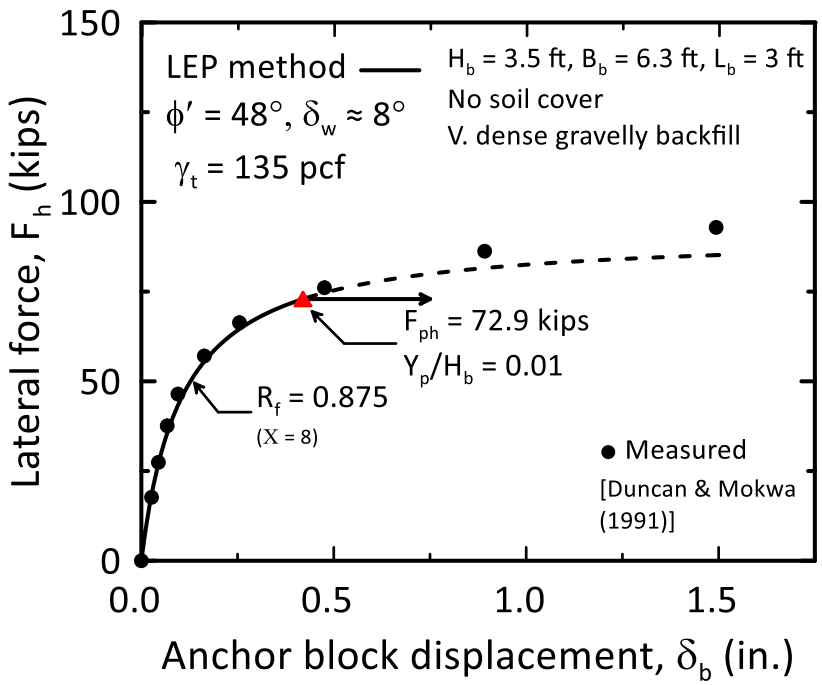

Figure 3.16. Passive field test results and predicted capacity

3.9. Trench backfill

The backfill used in the trench near the anchor block should be a free-draining granular (cohesionless) material. AWWA M55 (2020) describes cohesionless soils that are suitable for pipe installation. The characteristics of these soils are given in Table 3.9. The soil surrounding the block should be compacted to at least 95% relative compaction using the applicable ASTM standard. Good compaction will increase the soil strength and stiffness substantially, and will result in smaller block movements. All of these effects are greatly beneficial. A suitable compaction resulting in a dense backfill is recommended.

These conditions are *not* intended to be a *requirement* for installation of HDPE pipelines, but are intended to provide guidelines for which the suggested methodology and soil conditions described in the previous sections apply.

Table 3.9. Cohesionless backfill materials suitable for use with HDPE anchor blocks

Backfill type	ASTM D2487 Group Symbol	ASTM D2487 Group Name
Class II **Coarse-grained**, clean with less than 5% fines	GW	Well-graded gravel
	GP	Poorly graded gravel
	SW	Well-graded sand
	SP	Poorly graded sand
Coarse-grained, with between 5 and 12% fines	GW-GM	Well-graded gravel with silt
	GW-GC	Well-graded gravel with clay
	GP-GM	Poorly graded gravel with silt
	GP-GC	Poorly graded gravel with clay
	SW-SM	Well-graded sand with silt
	SW-SC	Well-graded sand with clay
	SP-SM	Poorly graded sand with silt
	SP-SC	Poorly graded sand with clay
Class III **Coarse-grained**, with more than 12% fines	GC	Clayey gravel
	GM	Silty gravel
	SC	Clayey sand
	SM	Silty sand

3.10. Active and passive force recommendations

The recommended procedures are:

1) Treat the soil above the anchor block on both the active and passive sides as a surcharge, $q_s = \gamma_t H_s$.
2) Use a Coulomb K_{aC} LEP coefficient with wall friction, δ_w, for the surcharge and weight components of the active force, P_{as} and $P_{a\phi}$.
3) Use a Kérisel & Abis (1990) K_{ps} LEP coefficient for the surcharge and weight components of the passive force, P_{ps} and $P_{p\phi}$., with a Reduction factor, R_{ps} that depends on δ_w/ϕ'. Use the same wall friction used for the active side.
4) Calculate the 3-D magnification factor, M, using K_{aC} and K_{ps} coefficients. Limit the factor to a maximum value of $M_{max} = 2.0$.
5) Vary the mobilized wall friction, δ_w, so that the net vertical earth force is always downward. The upward force cannot exceed the downward force.

6) Using this approach, the horizontal components of the magnified active and passive forces, F_a and F_p, are:

$$F_{ah} = M\left(P_{as} + P_{a\phi}\right)\cos\delta_w$$

$$F_{ph} = M\left(P_{ps} + P_{p\phi}\right)\cos\delta_w$$

7) Calculate the Factor of Safety in terms of capacity and demand by:

$$FS_{cap} = \frac{\text{Lateral passive } \textit{capacity}}{\text{Lateral driving } \textit{demand}} = \frac{M\left(P_{ps} + P_{p\phi}\right)\cos\delta_w}{F_T + F_v + M\left(P_{as} + P_{a\phi}\right)\cos\delta_w}$$

8) The value of block displacement, Y_p, to develop the full passive pressure depends on the anchor block height and physical state of the compacted backfill. Use the hyperbolic model to determine the movement of the anchor block, δ_{bh}. Compare this to the allowable joint opening for the attached segmented pipeline. The recommended displacements to mobilize the full passive resistance and the hyperbolic reduction factors for different backfill densities are given below.

Physical state of compacted backfill	Passive disp. Y_p/H_b	Hyperbolic reduction factor, R_f
Loose	N/R	N/R
Medium	0.03	0.800
Dense	0.02	0.850
Very dense	0.01	0.875

Section 4

Structural recommendations for concrete anchor blocks

4.1. Introduction

The structural design of the anchor blocks is conceptually similar to the design of a reinforced concrete footing. The primary difference between the anchor block design and a traditional footing is how the load is applied to the anchor block. As illustrated in Figure 4.1, load is applied to the anchor blocks via the load transfer devices which are electrofused to the pipes. Figure 4.2 shows a typical restraint and dimensions. In this report flexible restraints are used. There are several manufacturers of these restraints. Other types of restraining systems (such as PE wall anchors) are acceptable provided they supply the required resistance to the design axial forces. Figure 4.1 shows multiple rows of devices distributed around the circumference of the HDPE pipe. In some cases, one row may be sufficient. Accordingly, the load is transferred into the concrete near the middle of the anchor block.

Note that the restraints are not centered on the block centerline. The edge of the restraint closest to the passive face is at the block centerline. Placing the restraints offset like this increases the effective depth for two-way (punching) shear. This is explained further in a following section. Having the restraints offset will require attention to construction documents and adequate field supervision during construction.

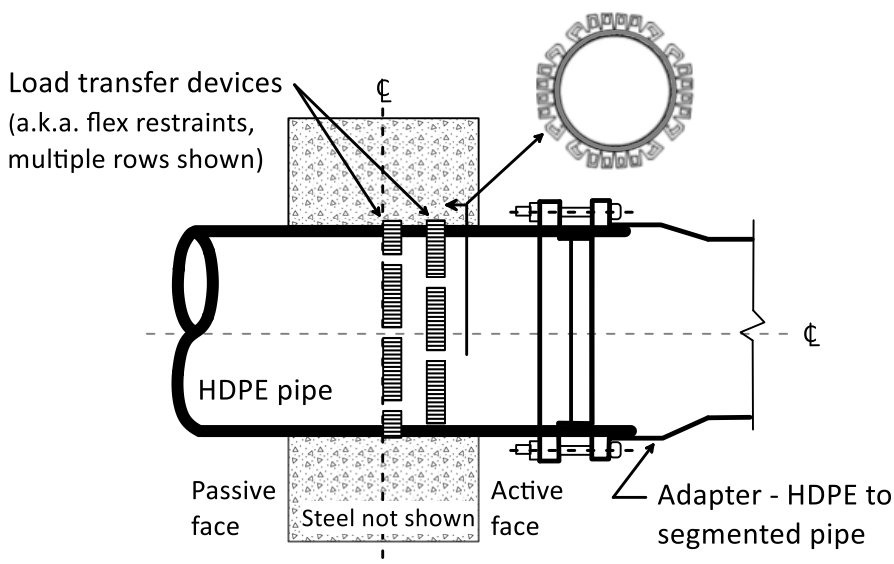

Figure 4.1. Anchor block with load transfer devices

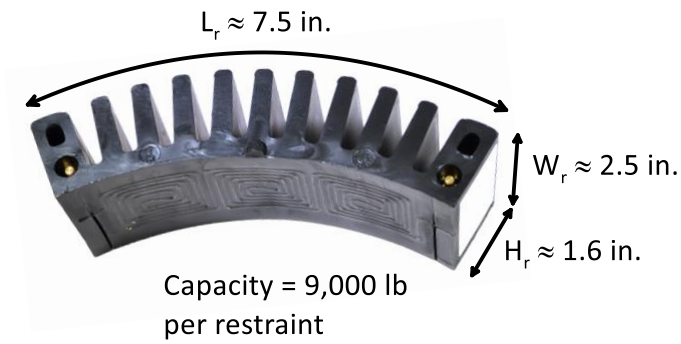

Figure 4.2. Typical load transfer devices – electrofusion welded to HDPE pipe (courtesy Integrity Fusion Products, Inc.)

There are several structural design considerations for the anchor block/restraint system: 1) the number of restraints necessary, 2) two-way or punching shear, 3) one-way shear, 4) flexural strength and steel reinforcement, and 5) temperature and shrinkage steel to control cracking in the concrete. In addition, the durability of the concrete used in the anchor block must be addressed. All of these are described in this section.

The structural design of the anchor blocks typically is performed using Building Code Requirements for Structural Concrete, ACI 318-19, (2019) as the governing building code. ACI 318 is adopted into general building codes, such as the International Building Code (IBC), or by local jurisdictional authorities. ACI 318 provides minimum code requirements for both structural and durability design of the anchor blocks. Numerous textbooks have been published describing the design of reinforced concrete structures. These resources can be used for additional background information on reinforced concrete design.

The design procedures in ACI 318 are based upon strength design concepts, in contrast to the allowable stress design procedures used in the preceding chapters to determine the minimum size of the anchor block and maximum load on the pipe. Strength design is based upon satisfying:

$$\phi S_n \geq \gamma Q_d \tag{4.1}$$

in which:

ϕ = strength reduction factor,

S_n = nominal strength,

γ = load factor, and

Q_d = a calculated or code-specified design load.

The loads on the pipe will vary with service conditions and therefore are considered live loads with a load factor of $\gamma = 1.6$ per ASCE 7-16 (2016). The design strength of the anchor block is determined using the procedures in ACI 318. The strength reduction factor (ϕ, or phi factor) is applied to the calculated nominal capacity, S_n, to produce the design strength. The magnitude of the strength reduction factor will vary depending upon the mode of failure, flexure, shear, etc., of the section being considered. The load factors and strength reduction factors are calibrated using reliability principles to provide a consistent level of safety in structural design.

The durability requirements are intended to ensure the anchor block remains stable during the service life of the concrete element and address the exposure of the anchor block to freeze-thaw, sulfates, chlorides and other adverse service conditions. Concrete material and construction requirements, such as minimum bar spacing, are intended to ensure that the concrete used in anchor block construction can be placed and adequately consolidated around the pipe and connecter elements.

The following sections describe the design of a reinforced concrete anchor block using ACI 318-19 criteria. Two worked design examples and typical design details are presented in Appendix B. The pipe and block sizes are the same as given in Appendix A, which gives the anchor block sizing examples.

4.2. Concrete materials and durability requirements

At the start of the design process, the concrete material requirements need to be determined based upon expected service conditions. Concrete material requirements are based presented in Chapter 19 of ACI 318-19. These requirements include minimum concrete strength, and specific requirements for the concrete used in anchor block construction based upon service exposure conditions.

The design professional needs to determine the expected freeze-thaw, sulfate, water, and chloride exposure conditions. Based upon the exposure conditions, requirements for the concrete used in anchor block construction are presented in Table 19.3.2.1 of ACI 318-19. For typical exposures, a minimum compressive strength, and maximum water / cementitious materials, w/cm, ratio will be determined. Additional concrete material requirements will occur in locations with high chloride exposures such as marine environments, or high sulfate contents in the soil or groundwater. These

locations may require a higher compressive strength or lower w/cm ratio to create a less permeable concrete.

Despite the placement of HDPE pipes in anchor blocks below the frost depth, portions of the anchor block may be above the frost depth. Therefore, concrete used in anchor block construction should be air-entrained in areas where sub-freezing temperatures are encountered. The air content can be based upon an F1 exposure (terminology used in ACI 318-19). An air-entrained concrete will protect the anchor block from freeze-thaw damage in the event of exposure to sub-freezing temperatures in service.

Coarse aggregates used in anchor block construction should be the largest size that can be consolidated around the load transfer devices and other embedded components. For typical situations, a ¾ in. maximum aggregate size will be appropriate. The use of larger aggregates may result in consolidation problems around the load transfer devices.

Traditional, non-coated, reinforcing steel (ASTM A615 Gr. 60) will typically be appropriate for anchor block construction. Use of galvanized (ASTM A757), epoxy-coated (ASTM A775 or A934) or zinc and epoxy dual coated (ASTM A1055) can be used in environments with significant chloride exposures. The use coated reinforcing steel will increase development lengths of reinforcing steel.

The concrete cover, defined as clear space to the reinforcing steel, should be determined in accordance with the requirements contained in Table 20.5.1.3.2 of ACI 318. For anchor blocks cast against the earth, a 3 in. minimum clear cover depth is required. For the concrete section cast against the HDPE pipe, a clear distance of 1.5 in. between the HPDE and the reinforcing steel is recommended. Typical material requirements for anchor block construction are shown in Table 4.1.

Table 4.1. Typical material properties used in anchor block construction

Min. compressive strength, f'_c	5,000 psi
Water/cement ratio, w/cm	0.45
Max. coarse aggregate size, d_{agg}	¾ in.
Air content (F1 exposure)	6%
Reinforcing steel	ASTM A615 Gr. 60

Large anchor blocks may be considered to be mass concrete elements. In mass concrete, the large amount heat generated during hydration of the portland cement in the concrete can result in cracking as the concrete cures and subsequently cools. Construction procedures to minimize the potential for cracking in mass concrete elements are described in ACI 207.1-21 (2022).

4.3. Concrete structural design

The structural design of the anchor blocks largely is a function of the punching or two-way shear capacity of the concrete, with the load on the pipe section resulting from the thermal and Poisson effects, and active earth pressure acting on anchor block. One-way shear and flexure are also considered. The loads can be determined following the worked examples in Appendix A. The load on the pipe is transferred into the anchor block via load transfer devices, as shown in Figure 4.2, that are electrofusion welded to the pipe. The following sections describe the steps for the design of an anchor block. The worked examples in Appendix B show detailed calculations for the structural design of anchor blocks for 8- and 24-in.-diameter pipes.

4.3.1. Number of load transfer devices

The required number of load transfer devices can be determined by dividing the unfactored pipe load, $T_{nominal} = F_T + F_v$, by capacity of the load transfer devices. Figure 4.3 shows a schematic of the staggered layout for multiple rows of the load transfer devices on a pipe.

The geometric characteristics of the restraints are:

a) The width of the flexible restraint, W_r,
b) The number of rows of flexible restraints, n_{row}, and
c) The separation distance between the rows, S_r.

The number of rows, n_{row}, needed can be determined based upon the pipe circumference and the length of the load transfer devices. The load transfer devices should be arranged radially around the pipe as with a gap of roughly S_r = 2 in. between rows if more than one row of load transfer devices is required. Figure 4.3 shows two rows of restraints.

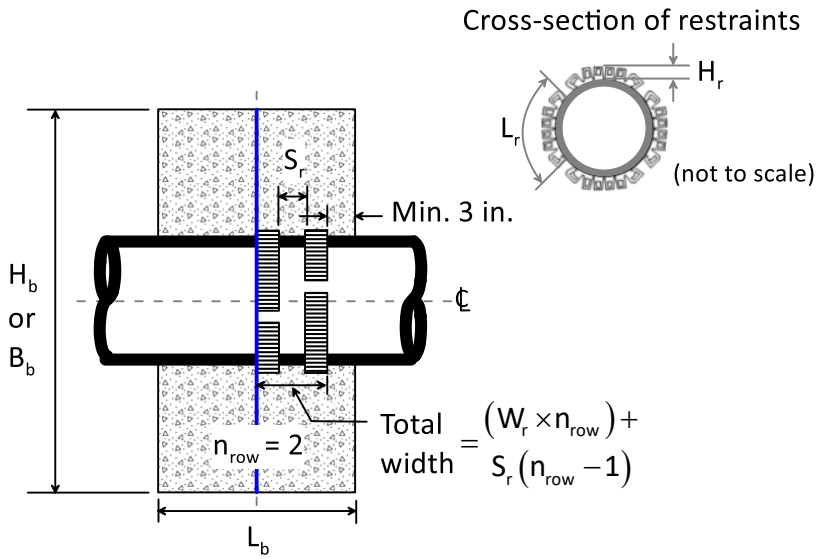

Figure 4.3. Layout and terminology for electrofusion flex restraints

The total width of the restraints fused along the pipe is:

$$\text{Total width of restraints} = (W_r \times n_{row}) + S_r(n_{row} - 1) \tag{4.2}$$

It is *very* important to note that the position of the flexible restraints is *not centered* in the middle of the anchor block. The edge of the row of restraints closest to the passive face of the block is placed at the center of where the block will be cast. This will require careful detailing in the construction drawings and specifications, as well as construction supervision. Moving the restraints to an offset position provides a greater effective depth for two-way (punching) shear considerations. This will be further explained in a following Section.

4.3.2. Pressure distributions on block

The lateral forces on the passive and active faces used to size the anchor blocks were derived by calculating the LEPs and multiplying by the net block area. These LEPs had a triangular/trapezoidal distributions consistent with general earth pressure principles. As such, the shapes of the pressure distributions shown in Figure 4.4 are used to determine the pressures acting for the structural design.

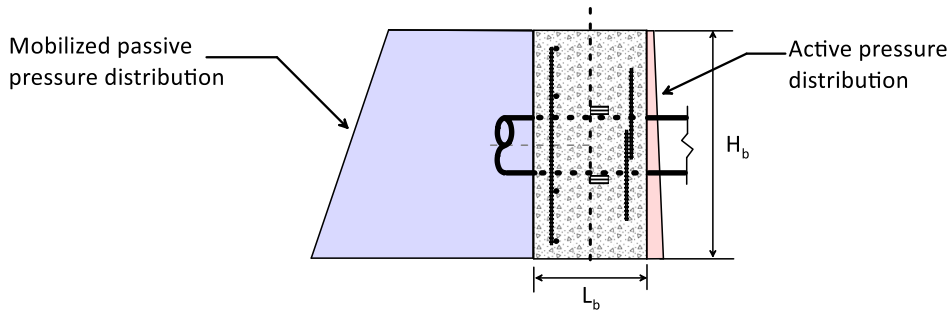

Figure 4.4. Pressure distribution on anchor block faces

Note that the pressure on the passive face is not the full "capacity" of the passive pressure, but only that necessary for equilibrium to balance the "demand" forces. However, a subscript "P" is used to represent the pressure on the passive face resulting from all three forces. The pressures distribution on the passive face has a slope of β. The active force, F_{ah}, also is distributed on the active face. The slope of the active pressure distribution is $\gamma_t K_{aC}$ since the active pressure is mobilized fully. The shaded area on the passive face must integrate to $(F_T + F_v + F_{ah}) = (F_{ph})_{mob}$. Also, the shaded area on the active face must integrate to F_{ah}.

Figure 4.5 shows the locations at which key pressures are calculated on both faces. The pressures are largest stresses at the bottom of the anchor block. Thus, the most critical tributary areas for one-way shear and for flexure are at the bottom of the block. These area also are shown on Figure 4.5

The equations for the pressures at key locations are given in Table 4.2. The average pressures are given in terms of F_T, F_v, and F_{ah}. The pressures at any location are given in terms of the average at the pipe/block centerline ± the distance below or above the pipe centerline. The net pressures used with the tributary areas also are given.

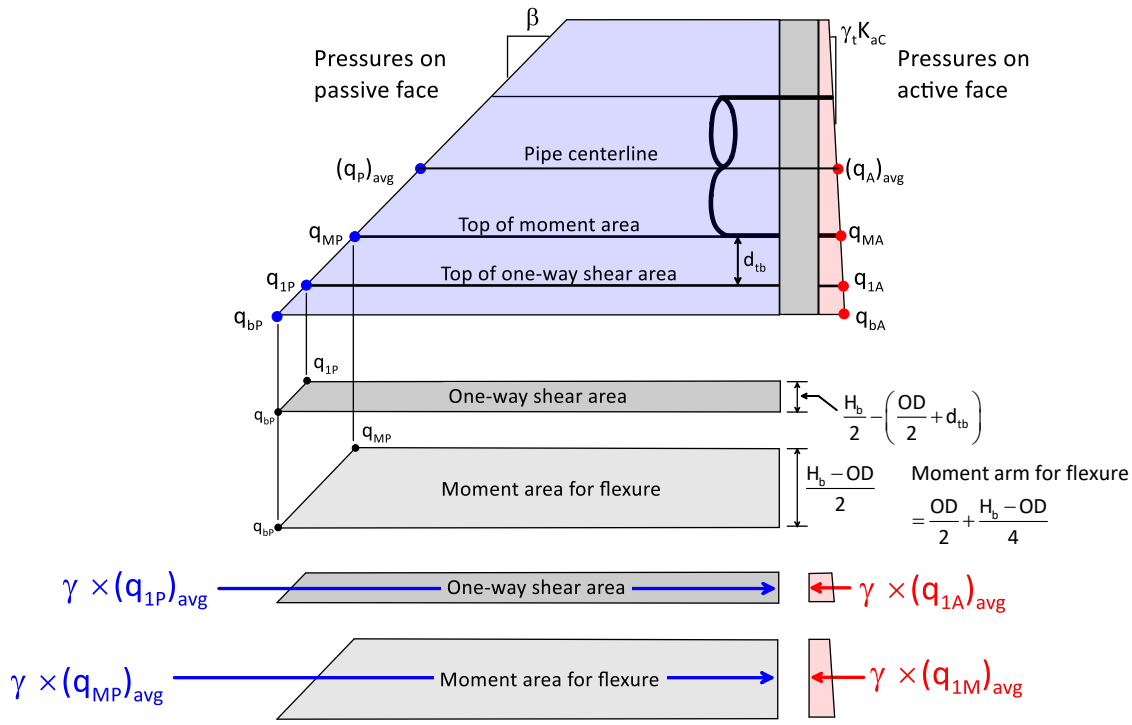

Figure 4.5. Pressure distributions and one-way shear and flexural moment tributary areas

4.3.3. Structural design – two-way (punching) shear

The required thickness of the anchor block typically will be controlled by the two-way shear capacity of the section. Figure 4.6 illustrates the concept of two-way shear, and how the required thickness of the section is affected by pipe size, location and number of the transfer devices, and concrete cover. Load transfer in the middle of the anchor block results in a smaller effective depth to resist the two-way (punching) shear compared to load being applied to the top of a traditional reinforced concrete footing. The initiation of the punching shear failure is taken at point C in Figure 4.6. The precise location of a failure plane is not known and multiple failure planes are possible. The plane shown results in the *most* conservative failure perimeter for punching shear, and is the simplest for calculations.

Table 4.2. Equations used to determine pressures on block faces

PASSIVE FACE

$$\left(q_P\right)_{avg} = \frac{F_T + F_v + F_{ah}}{\left(A_b\right)_{net}}$$

$$\beta = \frac{\left(q_P\right)_{avg}}{z = \left(H_s + H_b/2\right)}$$

Above pipe centerline: $q(z) = \left(q_P\right)_{avg} - \beta\left(\text{distance above pipe centerline}\right)$

Below pipe centerline: $q(z) = \left(q_P\right)_{avg} + \beta\left(\text{distance below pipe centerline}\right)$

$$q_{P1} = \left(q_P\right)_{avg} + \beta\left(OD/2 + d_{tb}\right)$$

$$q_{PM} = \left(q_P\right)_{avg} + \beta\left(OD/2\right)$$

$$q_{Pb} = \left(q_P\right)_{avg} + \beta\left(H_b/2\right)$$

Average passive face q for flexural moment $= \left(q_{PM}\right)_{avg} = \dfrac{q_{PM} + q_{Pb}}{2}$

Average passive face q for one-way shear $= \left(q_{P1}\right)_{avg} = \dfrac{q_{P1} + q_{Pb}}{2}$

ACTIVE FACE

$$\left(q_A\right)_{avg} = \frac{F_{ah}}{\left(A_b\right)_{net}}$$

$$\text{slope} = \gamma_t K_{aC}$$

Above pipe centerline: $q(z) = \left(q_A\right)_{avg} - \gamma_t K_{aC}\left(\text{distance above pipe centerline}\right)$

Below pipe centerline: $q(z) = \left(q_A\right)_{avg} + \gamma_t K_{aC}\left(\text{distance below pipe centerline}\right)$

$$q_{A1} = \left(q_A\right)_{avg} + \gamma_t K_{aC}\left(OD/2 + d_{tb}\right)$$

$$q_{AM} = \left(q_A\right)_{avg} + \gamma_t K_{aC}\left(OD/2\right)$$

$$q_{Ab} = \left(q_A\right)_{avg} + \gamma_t K_{aC}\left(H_b/2\right)$$

Average active face q for flexural moment = $\left(q_{AM}\right)_{avg} = \dfrac{q_{AM} + q_{Ab}}{2}$

Average active face q for one-way shear = $\left(q_{A1}\right)_{avg} = \dfrac{q_{A1} + q_{Ab}}{2}$

NET PRESSURES

Net average $\left(q_{avg}\right)_{net} = \left(q_P\right)_{avg} - \left(q_A\right)_{avg}$

Net average q for one-way shear = $\left(q_1\right)_{net} = \left(q_{P1}\right)_{avg} - \left(q_{A1}\right)_{avg}$

Net average q for flexural moment $= \left(q_M\right)_{net} = \left(q_{PM}\right)_{avg} - \left(q_{AM}\right)_{avg}$

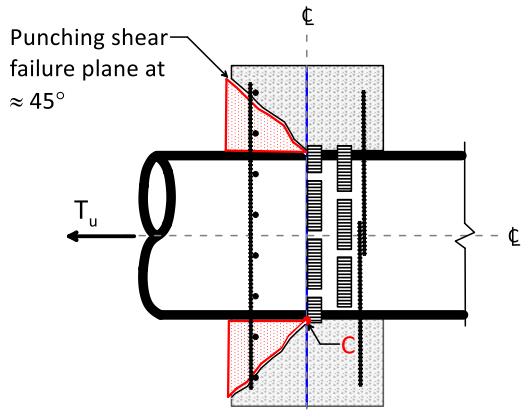

a) Two-way (punching) shear failure zones

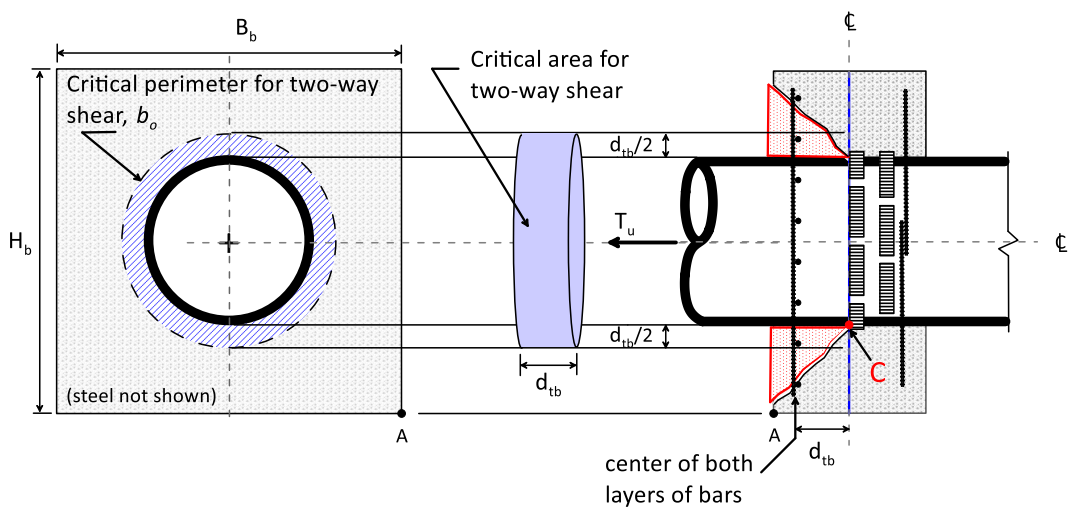

b) Critical perimeter and shear zone for two-way (punching) shear

Figure 4.6. Two-way (punching) shear schematic

The terminology use in this section follows the general notations and definitions given in ACI 318-19. Some deviations are given and noted as necessary to provide additional clarification. The first important definition relates to the effective depth for two-way (punching) and one-way shear. This depth is referred to as d_{tb}. This distance depends on the block thickness, L_b, the positions of the reinforcing steel, and the geometric characteristics of the restraint system.

The effective depth for two-way and one-way shear, d_{tb}, is given by:

$$d_{tb} = \frac{L_b}{2} - cc - d_b \tag{4.3}$$

in which:

cc = clear cover for steel reinforcement,

d_b = reinforcing bar diameter, and

n_{row} = number of rows of restraints.

These dimensions are shown in Figures 4.3 and 4.4.

The effective depth, d_{tb}, for punching shear is taken as the distance from the pipe/restraint edge closest to the passive face (point C in Figure 4.6) to the center of the horizontal and vertical reinforcing steel. In typical footing design, the section depth, d, is the distance from the compression face of the section to the centroid of the tension reinforcement. The two-way shear capacity of the section is determined from the effective section depth and pipe size, which determines the critical shear perimeter, b_o. The area over which the shear capacity is calculated is the critical shear perimeter, b_o, multiplied by the effective depth, d_{tb}. This critical area is shown in Figure 4.6. The critical shear perimeter, b_o is:

$$b_o = \pi\,(\mathrm{OD} + d_{tb}) \tag{4.4}$$

ACI 318-19 states that the two-way shear capacity is calculated as the minimum of:

$$\phi V_c = \text{minumum of} \begin{bmatrix} \text{a) } \phi\, 4\, \lambda_s \lambda\, \sqrt{f_c'} \\ \text{b) } \phi\left(2 + 4/\beta\right)\lambda_s \lambda \sqrt{f_c'} \\ \text{c) } \phi\left(2 + \alpha_s d_{tb}/b_o\right)\, \lambda_s \lambda\, \sqrt{f_c'} \end{bmatrix} \times b_o d_{tb} \tag{4.5}$$

in which:

f'_c = specified compressive strength of the concrete,

ϕ = strength reduction factor for shear = 0.75,

b_o = perimeter of critical section for two-way shear,

d_{tb} = effective depth of the section resisting two-way shear (see Figure 4.3),

λ = Modification factor to reflect the properties of lightweight concrete relative to normalweight concrete. $\lambda = 1.0$ of normalweight concrete,

λ_s = factor used to modify shear strength based upon the effect of member depth, and

α_s = constant used in calculation of V_c in beams and slabs.

These equations are used to determine the two-way shear capacity of the section when no additional shear reinforcement is provided, which is the typical case in anchor block design. ACI 318-19 provides additional information if supplemental shear reinforcement is used.

The design for two-way shear is considered adequate when the capacity is greater than the factored load, as given by:

$$\phi V_c \geq \left[\mathrm{T_u} = \left(\gamma = 1.6 \right) \times \left(\mathrm{F_T} + \mathrm{F_v} \right) \right] \tag{4.6}$$

If the capacity of the section is not adequate, the thickness of the section can be increased, or supplemental shear reinforcement added. Changes in section thickness should be reviewed carefully to ensure the geotechnical design parameters are not exceeded.

4.3.4. Structural design – one-way shear

In addition to two-way shear, the anchor block needs to be designed to resist one-way (beam) shear as illustrated in Figure 4.7. The soil pressures described in Section 4.3.2 are unfactored. To evaluate one-way shear, the average net unfactored soil pressure for one-way shear, $(q_1)_{net}$, is given in Table 4.2.

Consistent with ACI 318-19, the critical section for one-way shear is located a distance, d_{tb}, away from the face of the pipe. The value for d_{tb} is the same as that used for two-way shear and is used in the one-way shear evaluation in lieu of the full d based upon the expected failure path of the section.

The shear force on the section is determined based upon the tributary area as illustrated in Figure 4.7. The one-way shear capacity can then be evaluated by comparing the factored shear force at the critical section with the shear capacity as determined using ACI 318-19.

The factored strength, ϕV_c, must be greater or equal to the factored shear V_u or the thickness of the anchor block would need to be increased. The net soil pressure located within d_{tb} of the face of the pipe is neglected in this calculation.

The tributary area for one-way shear, A_L is taken as:

$$\mathrm{A_L} = \left[\frac{\left(\mathrm{B_b \text{ or } H_b} \right) - \mathrm{OD}}{2} - \mathrm{d_{tb}} \right] \times \left(\mathrm{B_b \text{ or } H_b} \right) \tag{4.7}$$

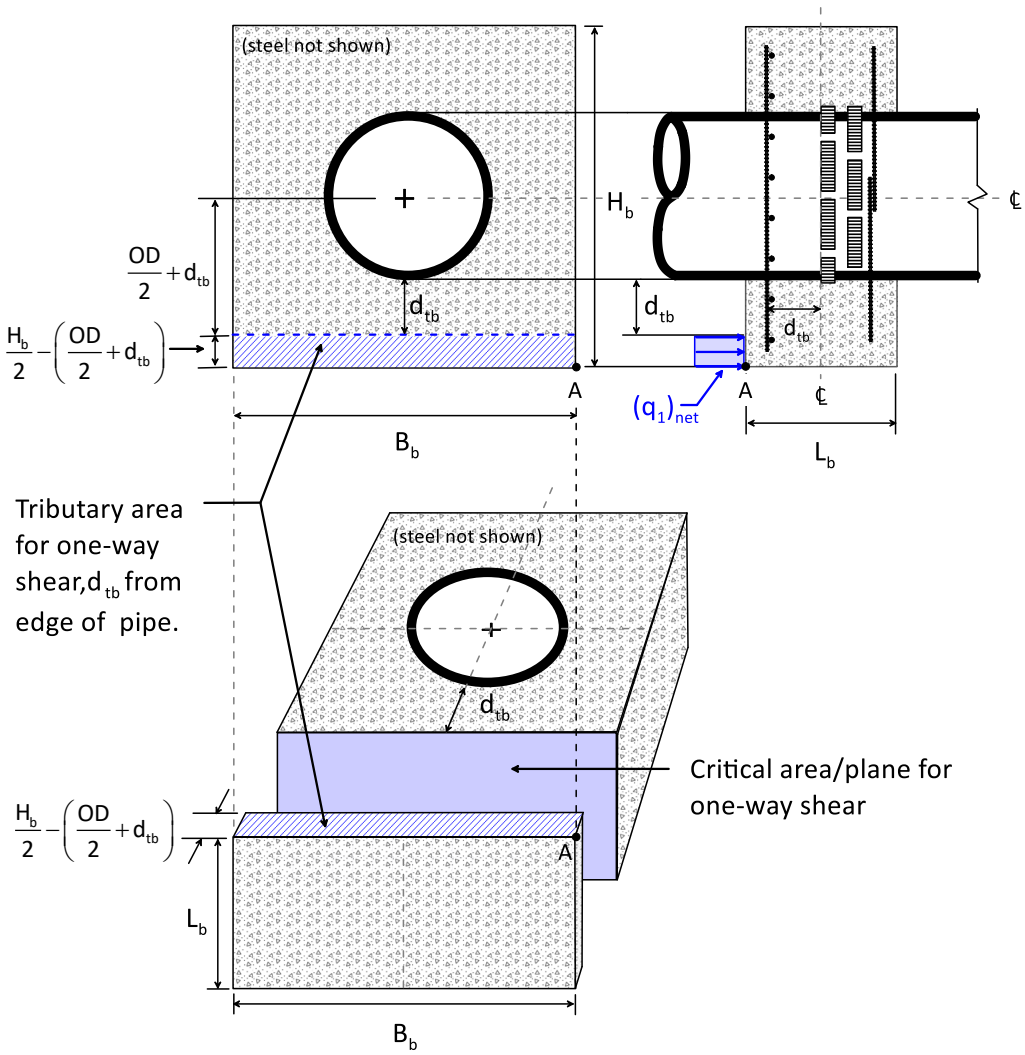

Figure 4.7. Tributary area for one-way shear on anchor block

The factored strength on the shear plane, ϕV_c, must be greater than or equal to the factored shear force on the tributary area, V_u, This is given by:

$$\left[\phi V_c = \phi 2\lambda \sqrt{f_c'}\, b_w d_{tb}\right] \geq \left[V_u = (\gamma = 1.6) \times (q_1)_{net} \times A_L\right] \tag{4.8}$$

in which:

b_w = the height, H_b, or width, B_b, of the square anchor block.

If a rectangular anchor block section is used, the one-way shear capacity will need to be calculated in both the short and long directions. The equation above assumes that no shear reinforcement is present in the section, which is typical in footing design. ACI 318-19 provides additional information if supplemental shear reinforcement is used.

4.3.5. Structural design – flexure

Reinforcing steel

The flexural capacity of the section, ϕM_n, is determined following the requirements of ACI 318-19. The critical section for flexure is assumed to occur at the edge of the pipe (face of the support in ACI 318-19 terminology), as shown in Figure 4.8. The bending moment on the section, M_u, results from the soil pressure, $(q_M)_{net}$, acting on the anchor block section times its moment arm.

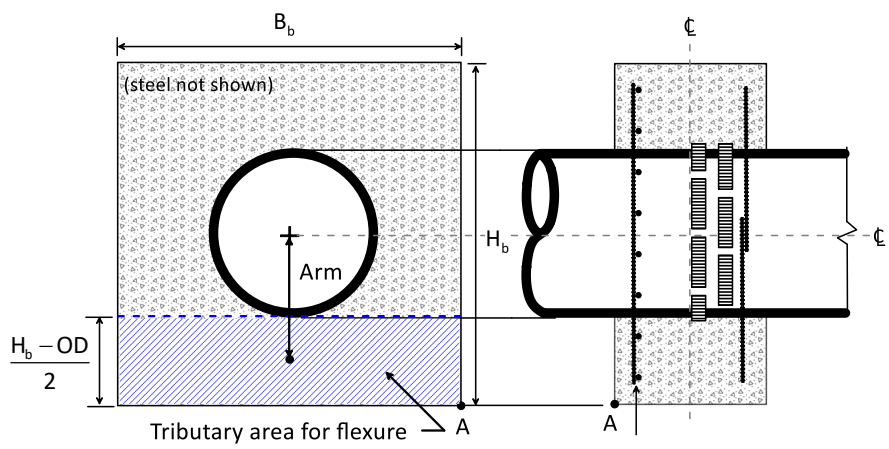

Figure 4.8. Tributary area for flexural loading on anchor block

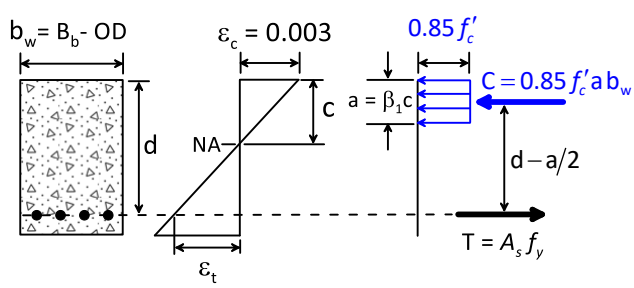

Figure 4.9. Concrete stress block

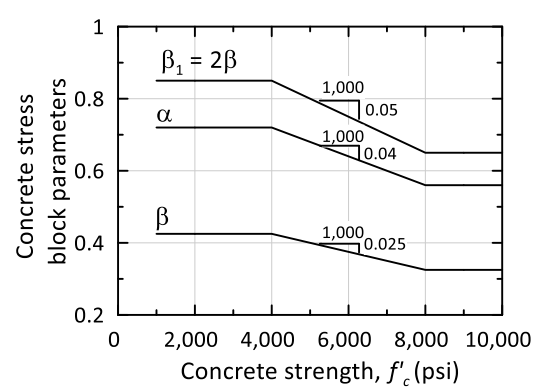

Figure 4.10. Concrete stress block parameters

The flexural moment demand is given by:

$$M_u = \underbrace{\left[\left(q_{Mu}\right)_{net} \times \frac{H_b - OD}{2} \times B_b\right]}_{\text{Force}} \times \left(\underbrace{\frac{OD}{2} + \frac{H_b + OD}{4}}_{\text{Arm}}\right) \tag{4.9}$$

in which:

$B_b = H_b$, the block height or width.

The moment can be expressed in terms of the flexural resistance factor:

$$M_n = Rb_w d^2 \Rightarrow R = \frac{M_u}{\phi\, b_w d^2} \qquad \left(\text{units}: F/L^2\right) \tag{4.10}$$

The strength reduction for flexure of ϕ = 0.9 is used for tension-controlled sections. This requirement must be confirmed once the required reinforcing steel area for flexure is determined.

The conventional concrete stress block diagram for a singly reinforced section is shown in Figure 4.9. The capacity of a section in flexure, ϕM_n, is determined by the couple formed by the compressive (C) and tensile (T) forces in the section, separated by the distance d - a/2. The capacity of the section can be expressed as a function of the tensile capacity of the reinforcement, $T = A_s f_y$, or the compression block capacity, $C = 0.85 f'_c\, a\, b_w$, either of which multiplied by the moment arm, d - a/2. Figure 4.10 shows the variation of the concrete stress block parameters with concrete strength.

Setting C = T gives:

$$\left(T = A_s f_y\right) = \left(C = 0.85 f_c' a\, b_w\right) \tag{4.11}$$

which gives:

$$a = \frac{A_s f_y}{0.85 f_c'\, b_w} \tag{4.12}$$

In the above equations:

a = depth of the compressive stress block in the concrete,

A_s = area of steel

b_w = modified width of the compressive stress block = B_b-OD,

f_y = specified yield strength of the reinforcement, and

f'_c = specified compressive strength of the concrete.

The flexural design should consider that the HDPE pipe at the center of the anchor block will not resist compressive forces, so should not be considered when calculating the compression block depth. Thus, $b_w = B_b$ - OD in Eqn. 4.12.

The most economical design will occur when the amount of reinforcing steel in the block is minimized. For flexure, the typical section depth, d, can be used in the capacity evaluation following the procedures in ACI 318-19. Since there will be two layers of steel for two-way flexure, the section depth, d, is given by the average depth to the centroid of the two layers. The depth is:

$$d = L_b - cc - d_b \tag{4.13}$$

The requirement amount of reinforcing steel typically is expressed as a reinforcement ratio, ρ, where:

$$\rho = \frac{A_s}{b_w d} \tag{4.14}$$

Summing moments about the centroid of the concrete compression block gives the nominal flexural moment:

$$M_n = A_s f_y \left(d - a/2\right) \tag{4.15}$$

Substituting Eqn. 5.14 into Eqn. 5.17, followed by additional rearrangement, it can be shown that:

$$R = \rho f_y - \left(\frac{\beta}{\alpha} \approx 0.59\right)\frac{\left(\rho f_y\right)^2}{f_c'} \Rightarrow \left(-0.59\frac{f_y^2}{f_c'}\right)\rho^2 + f_y\rho - R = 0 \tag{4.16}$$

This quadratic equation gives the required steel ratio as:

$$\rho_{req'd} = \frac{0.85 f_c'}{f_y}\left(1 - \sqrt{1 - \frac{2R}{0.85 f_c'}}\right) \tag{4.17}$$

If $\rho_{req'd} < 0.0033$, the $\rho_{to\ use}$ is the smaller of $\frac{4 \times \rho_{req'd}}{3}$ or 0.0033. Otherwise $\rho_{to\ use} = \rho_{req'd}$.

Next, the area of the reinforcing steel is calculated based on:

$$\begin{aligned} A_{s,req'd} &= \rho_{to\ use}\left(d \times b_w\right). \\ A_{s,min} &= 0.0018 \times \left(A_g = L_b \times H_b\right). \\ A_{s,to\ use} &= \text{the larger of } A_{s,req'd} \text{ or } A_{s,min}. \end{aligned} \tag{4.18}$$

The $A_{s,min}$ value of $0.0018 \times A_g$ represents the code-required (Section 24.4.4 in ACI 318-19) minimum amount of reinforcing steel needed to control cracking from for concrete shrinkage and temperature changes. In some situations, the minimum required amount for shrinkage and temperature reinforcement may be greater in area than the flexural reinforcement required for flexural strength.

The number of bars to use in <u>*each*</u> layer of reinforcement in the square block is:

$$\#\text{ bars} = \frac{A_{s,\text{to use}}}{a_b} \tag{4.19}$$

The # bars is rounded up to an even number so that there is an equal number of bars above and below and on either side of the pipe center. The area of steel provided, $A_{s,prov}$, then is the rounded number of bars in one direction bars times the area per bar.

Flexural reinforcing steel will need to be placed in both directions in the anchor blocks. Note that since there are two layers of steel reinforcement an average reinforcement depth is used in design. The reinforcing steel used for flexural reinforcement should extend for the full dimensions of the anchor block leaving adequate clear cover. Additional, shorter pieces of reinforcing steel can be placed around the pipe section as illustrated in Figure 4.9.

The minimum bars spacing depends is the *greatest* of a) 1 in., b) the bar diameter, d_b, or c) $(4/3)d_{agg}$ = (4/3)(0.75 in.) = 1.0 in. The maximum allowable bar spacing is 18 in., and the minimum, assuming the maximum bar size is #8, is 1 in. The bars should be uniformly spaced on either side of, and above and below the pipe.

The required reinforcing steel in the section was determined assuming a strength reduction factor of $\phi = 0.9$, which assumes the capacity of the section is tension-controlled. The reinforcement in a tension-controlled section will yield prior to the concrete crushing at full-factored load conditions. To confirm this, the strain in the reinforcing steel, ε_t, at ultimate strength needs to be calculated and confirmed to be greater than the yield strain $\varepsilon_{ty} + 0.003$. The strain in the reinforcing steel can be calculated from the section parameters as follows:

1) Calculate a, the effective depth of the compression block. Use the area of steel that is provided, $A_{s,prov}$, in Equation 5.14 along with $b_w = B_b - OD$,

2) Calculate $c = a/\beta_1$, the depth to the neutral axis in the concrete section at ultimate load, using β_1 given in ACI 318-19 Table 22.2.2.4.3 or Figure 4.10. ($\beta_1 = 0.80$ for $f'_c = 5{,}000$ psi).

Once the neutral axis depth is determined, the strain in the reinforcing steel, ε_t, can be calculated as follows:

$$\varepsilon_t = \varepsilon_c \times \frac{d - c}{c} \tag{4.20}$$

in which:

$\varepsilon_c = 0.003$ = assumed crushing strain in the concrete at failure, and

d = effective depth.

When $\varepsilon_t > 0.005$, a strength reduction factor of 0.9 can be used. In other situations, a lower strength reduction factor will be needed. Due to the low reinforcement ratios required for strength in the anchor blocks, a strength reduction factor of 0.9 will be typical.

<u>Bar development length</u>

The development length, ℓ_d, of the reinforcing steel development needs to be determined at the critical section for flexure. The development length for straight deformed bars is calculated using ACI 318-19 Section 25.4.2.4. The ACI equation below is be used to calculate the required development length, ℓ_d.

$$\ell_d = \left[\frac{3}{40} \frac{f_y \psi_t \psi_e \psi_s \psi_g}{\lambda \sqrt{f'_c} \left(\frac{c_b + K_{tr}}{d_b} \right)} \right] d_b \tag{4.17}$$

Use $K_{tr} = 0$.

The development length for straight bars is compared to the available length in the block, which is ½(B_b or H_b) minus the concrete cover, cc.

If insufficient length is available in the section for development of the reinforcing steel selected, smaller diameter bars may be preferable. If smaller bars still are too long for the block size, hooked bars must be used. For hooked reinforcing bars, the development, ℓ_{dh}, is the largest of the following values, as given in ACI Section 25.4.3.1:

$$\text{a) } \ell_{dh} = \left[\frac{f_y \psi_e \psi_r \psi_o \psi_c}{55\lambda\sqrt{f_c'}} \right] d_b^{1.5}, \quad \text{b) } \ell_{dh} = 8d_b, \text{ or} \quad \text{c) } \ell_{dh} = 6 \text{ in.} \tag{4.18}$$

in the above equations:

ψ_c = factor used to modify the hook development length based on concrete strength. $\psi_c = f_c'/15{,}000 + 0.6$ for f_c' less than 6,000 psi,

ψ_e = factor used to modify the development length based on reinforcement coating. $\psi_e = 1.0$ for uncoated reinforcement,

ψ_g = factor used to modify the development length based upon reinforcement grade. $\psi_g = 1.0$ for grade 60 reinforcement,

ψ_o = factor used to modify the hook development length based upon location of the hooks. $\psi_o = 1.25$ for hooks with limited side cover,

ψ_r = factor used to modify the hook development length based upon the extent of confinement ($\psi_r = 1.6$ for hooks without confining stirrups),

ψ_t = factor used to modify development length for casting location in tension. $\psi_t = 1.0$ when less than 12 in. of concrete is placed below a horizontal bar, and $\psi_t = 1.3$ in other cases, and

λ = factor used to account for lightweight or normalweight concrete. $\lambda = 1$ for normalweight concrete.

Table 4.3 gives the ACI requirements for hooked bars.

Table 4.3. Standard hook development for deformed bars in tension (after ACI 3-8-19)

Type of standard hook	Bar size	Minimum inside bend diameter (in.)	Straight extension, ℓ_{ext} (in.)	Type of standard hook
90° hook	#3 through #8	6 d_b	12 d_b	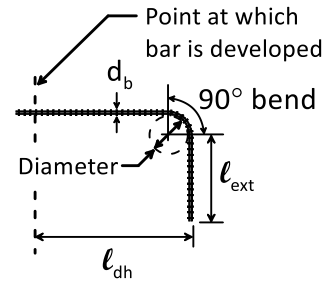
180° hook	#3 through #8	6 d_b	Greater of 4 d_b or 2.5 in.	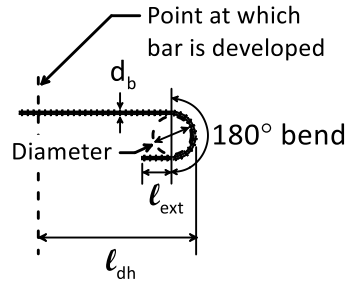

4.3.6. Detailing of reinforcement

The preceding sections describe to the structural design of the anchor blocks to resist forces from the HDPE pipe. On the passive face of the block, the primary flexural reinforcement should be placed with an equal number of full length bars on each side of the HDPE pipe, and above and below the pipe, with the reinforcement equally spaced. To control cracking, smaller reinforcing steel bars with a closer spacing are preferable to larger bar sizes and a wider spacing. Additional partial length reinforcement can be placed near the pipe as illustrated in Figure 4.11.

Additional reinforcement should be added on the active pressure side of the anchor block to mitigate cracking around the HDPE pipe. Depending up on the size of the pipe, typically four bars, the same size as the primary reinforcement, should be added. Additional bars can be added as the pipe size increases. The bars should be placed to have 1.5 in. of clear cover between the pipe and the bars.

The steel requirements suggested in this report follow the recommendations in ACI 318-19. The flexural steel on the tension side of the anchor block is the larger of the steel quantities $A_{s,req'd}$ based

on the moment capacity, or $A_{s,min}$ based on the gross area. This satisfies ACI 318-19 Section 8.6.1.1 to put a <u>minimum</u> flexural reinforcement of $A_{s,min} = 0.0018 \times A_g$ on the tension (passive) side.

Figure 4.11 shows a representation of reinforcement both ways on the passive side of the block for a relatively large diameter pipe and a large block. Reinforcement consisting of four bars, the same size as the flexural steel bars, is recommended closest to the active side to mitigate/control cracking around the HPDE and transition pipes. The active side of the anchor is in compression, which also will help control cracking.

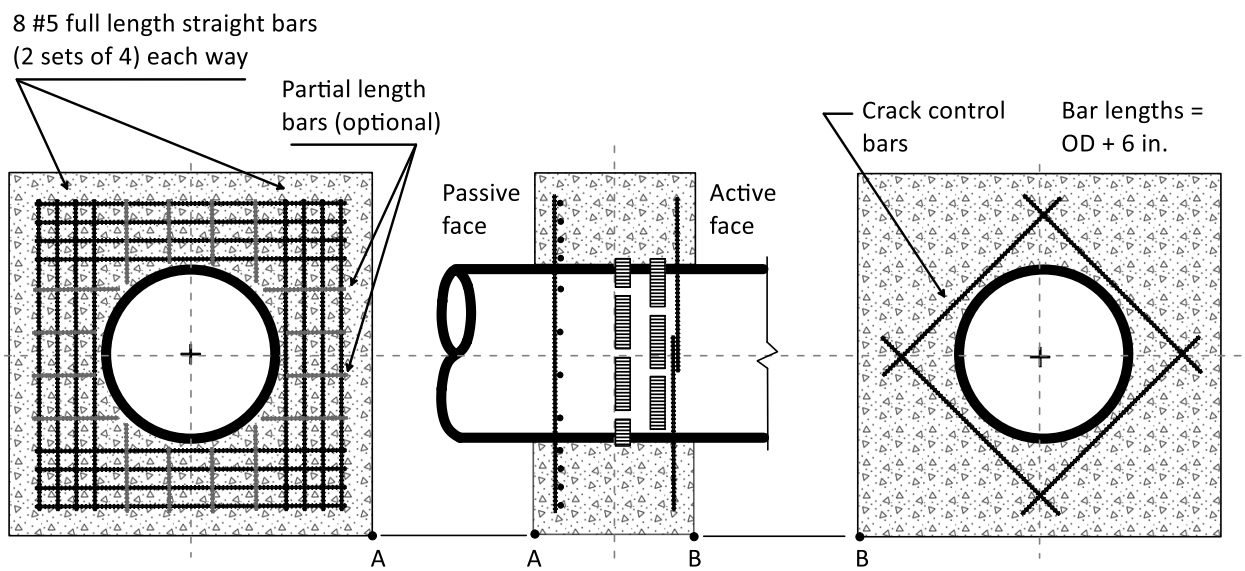

Figure 4.11. Schematic of anchor block with reinforcement

4.4. Summary

The preceding sections describe the design of concrete blocks to resist forces generated by thermal and Poisson effects in the pipe and soil pressures. The design procedure follows the requirements of ACI 318-19, which will be the typical code used the design of reinforced concrete structures. The design process includes consideration of durability requirements for the anchor block and describes the calculations needed to determine the required anchor block thickness and reinforcing steel requirements. The initial height and width of the square anchor block is based upon the geotechnical requirements.

The first step in the structural design is to determine the number of flexible restraints to transfer load from the HDPE pipe to the anchor block. The required thickness of the block is determined based upon the two-way shear capacity of the section. If the initial thickness of the block is not adequate for punching shear, a thicker section must be used. The requirements for the structural steel are described. The required full length bars should be placed in equal numbers on each side and above and below the pipe. Shrinkage/temperature control requirements also are given.

Section 5

Anchor block dimensions, flex restraints, and reinforcement

5.1. Introduction

This section presents the sizes of anchor blocks used to resist thermal and Poisson forces for a range of HDPE sizes and design conditions. The method used is based on lateral earth pressures and considers the movement of the block which can affect an attached segmented pipeline. The approach presented in the previous section for sizing the blocks is sufficiently general that it can be used for any buried PE pipe.

5.2. Block size constraints

There are three conditions for the minimum pipeline depth:

1) Soil cover of at least one pipe diameter,
2) Soil cover of at least 3 ft, and
3) The pipe outside crown must be below the frost depth.

The greatest of these three conditions sets the minimum pipe depth. Since the largest pipe OD used in this report is less than 3 ft, either condition 2) the 3-ft-minimum soil cover or 3) the frost-depth-minimum should generally control. The minimum frost depths for design often are determined by local conditions or utility practices. Rather than set specific depths for sizing blocks, anchor block sizes are given for pipe crown depths from 3.5 to 12 ft. This allows the design engineer to select the appropriate pipe/frost depth for their application.

Geometric considerations also limit the block sizes. There are several conditions that must be satisfied before the detailed methodology given in Section 3 is started. Figure 5.1 shows constraints on the block geometry. To meet these constraints:

1) The minimum block height and width is equal to the pipe OD + 2 ft. Round this value up to the nearest 0.5 ft.
2) The pipe is located at a depth within the concrete block of ½H_b, i.e., in the middle of the block.
3) There must be at least 1 ft of concrete above the pipe crown and below the pipe invert, and on either side of the pipe.
4) The minimum depth to pipe crown, z_c, must still allow H_s = 2 ft of soil cover above the block. This depth depends on the block size. These minimum depths to crown are rounded up to the nearest 0.5 ft.

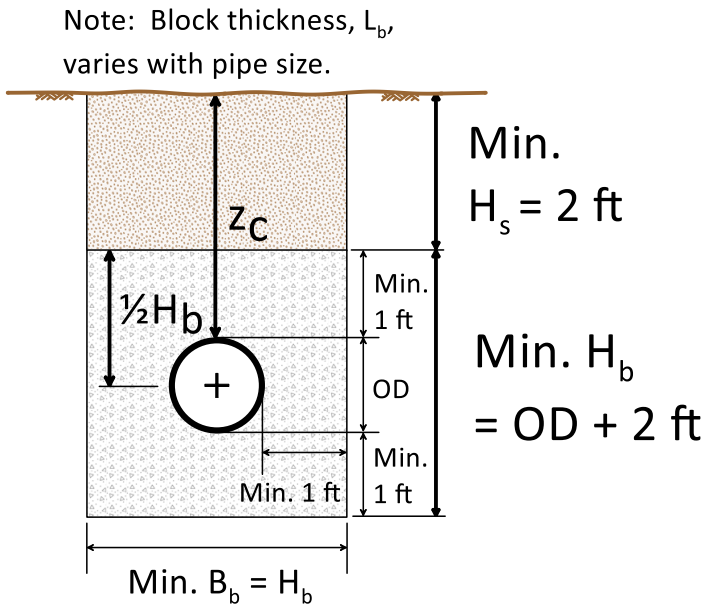

Figure 5.1. Geometry used for anchor block sizes

Table 5.1. Minimum square anchor block height/width based *only* on geometric constraints in Figure 5.1

Nominal pipe size (in.)	Min. pipe depth, z_c (ft)	Min. block $H_b \times B_b$ (ft)	
		DIPS	IPS
4	3.5	2.5	2.5
8	3.5	3.0	3.0
12	3.5	3.5	3.5
18	3.5	4.0	3.5
24	3.5	4.5	4.0

5.3. Minimum block thicknesses

There are three conditions that must be satisfied to determine the minimum thickness of an anchor block.

1) The block must be thick enough to provide a minimum of 3 in. concrete cover for the flex restraints on the active side of the block. Examples of the minimum thicknesses of small blocks needing only one row of restraints and large blocks needing two (or more) rows of restraints are shown in Figures 5.2a) and b).

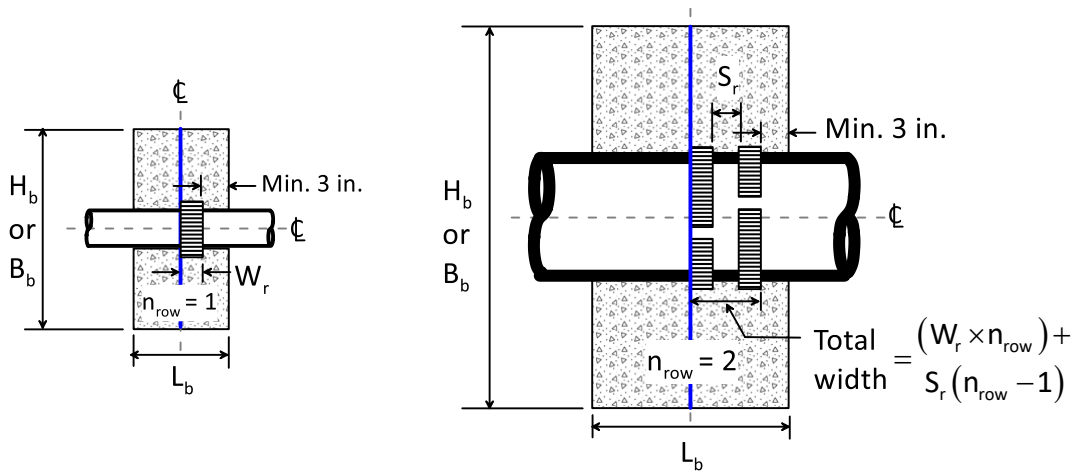

a) One row of restraints b) Two rows or restraints

Figure 5.2. Minimum block size based on flex restraints

2) The block must be thick enough to meet the one-way (punching) shear requirement, and
3) The block must be thick enough to meet the two-way shear requirement.

These requirements are dependent on pipe size, the design water pressures, and the temperature environment. These determine the axial thrust that must be resisted. They do not depend on the density, strength of the backfill, or depth. Table 5.2 lists the minimum block thicknesses for DIPS and IPS pipe, DR11 and DR17, for both full and ⅔ design water pressures. Full design pressure is (WP = PC) + (P_{OS} = 1.0 × PC). ⅔ pressure is (WP = ⅔ × PC) + (P_{OS} = ⅔ × PC). For DR11 and DR17, full pressures are 400 psi and 250 psi, respectively. In Table 5.2 the block thicknesses, L_b, have been rounded up to the nearest 2 in.

Table 5.2. Minimum anchor block thicknesses

Minimum concrete anchor block minimum thicknesses, L_b (in.)										
Pipe Size (in.)		Full pressure: [(WP = PC) +(P_{OS} = 1.0 × PC)]								
		DIPS					IPS			
		DR11		DR17			DR11		DR17	
		Warm	*Cold*	*Warm*	*Cold*		*Warm*	*Cold*	*Warm*	*Cold*
4		12		12			12		12	
8		16		14			14	16	14	
12		18	20	16			18		16	
18		24		20			22	24	18	20
24		30		24			28		22	
Pipe Size (in.)		⅔ pressure:[(WP = ⅔ ×PC) + (P_{OS} = ⅔ × PC)]								
		DIPS					IPS			
		DR11		DR17			DR11		DR17	
		Warm	*Cold*	*Warm*	*Cold*		*Warm*	*Cold*	*Warm*	*Cold*
4		12		12			12		12	
8		14		12			14		12	
12		16		14			16		14	
18		20		16	18		20		16	
24		24	26	20			22	24	20	

Table 5.3. Pipe conditions for anchor block sizes

Variable parameters	**Values**
Pipe diameter, OD	Nominal DIPS and IPS 4, 8, 12, 18, and 24 in.
Dimension ratio, DR	11 and 17
Temperature zones	*Warm* and *Cold*
Internal pressures, p	Full pressure: [(WP = PC) + (P_{OS} = 1.0 × PC)] ⅔ pressure: [(WP = ⅔ × PC) + (P_{OS} = ⅔ × PC)]
Soil and displacement parameters	Medium density cohesionless soil: ϕ' = 35°, γ_t = 115 pcf, Y_p/H_b = 0.03 Dense cohesionless soil: ϕ' = 40°, γ_t = 125 pcf, Y_p/H_b = 0.02
Block/soil wall friction	δ_w varies to maintain $(F_v)_{net}$ down. (F_{av} plus gravity)
Fixed parameters	**Values**
Construction type	*Best* practices, for thermal stresses
HDPE Poisson's ratios	ν_{long} = 0.45, ν_{short} = 0.35
Block thickness	L_b varies with DR, water pressure, and temperature
Design limits	**Values**
Block minimum size	Single square block with minimum sizes as given in Tables 5.5 through 5.14
Soil cover above block	Minimum H_s = 2 ft
Maximum magnification	Limited to M_{max} = 2.0
Factor of safety on capacity	Min. FS_{cap} = 1.50
Allowable block movement/ joint opening	(δ_b = δ_j) ≤ 0.5 in.

5.4. Square anchor block sizes

The subset of conditions for which anchor blocks are sized is given in Table 5.3. The block sizes for the conditions listed in Table 5.3 are given in Tables 5.5 to 5.14. The minimum height of soil is H_s = 2 ft above the top of the block, and the concrete cover all around the anchor is a minimum of 1 ft. Anchor block sizes have been rounded up to the nearest 0.5-ft. If the minimum soil cover

Table 5.4. Organization of tabulated anchor block dimensions

Tables 5.5 – 5.9	Tables 5.10 – 5.14
Full pressure: [(WP = PC) +(P_{OS} = 1.0×PC)]	**⅔ pressure:** [(WP = ⅔×PC) + (P_{OS} = ⅔×PC)]
Pipe sizes 4, 8, 12, 18, and 24 in.	Pipe sizes 4, 8, 12, 18, and 24 in
DIPS, DR11 and DR17	DIPS, DR11 and DR17
Medium dense and Dense soil	Medium dense and Dense soil
Warm and *Cold* zones	*Warm* and *Cold* zones
IPS, DR11 and DR17	IPS, DR11 and DR17
Medium dense and Dense soil	Medium dense and Dense soil
Warm and *Cold* zones	*Warm* and *Cold* zones

cannot be achieved for a given pipe depth and required capacity, no block dimensions are given. The block sizes in the tables are based on 1) a minimum factor of safety for the block capacity of FS_{cap} = 1.5, and 2) block displacements, using the hyperbolic model, less than an allowable movement of $\delta_{bh} = \delta_j$ = 0.5 in. for the joint of an attached segmented pipe. Block thicknesses for each case are given in the size tables.

The tables for the square block sizes are organized as given below in Table 5.4. Tables 5.5 through 5.9 are for pipes for full design water pressure. Tables 5.10 through 5.14 are for ⅔ design water pressure.

It is important to note that the anchor block dimensions using the design methodology in this report should be limited to HDPE pipes used for pressurized water pipe with a nominal OD ≤ 24 in. While the technical approach for the anchor blocks is valid for pipes having larger diameters, these pipes may have other constraints on their use which have not been addressed in this report. Also, the square block dimensions should have (H_b = B_b) ≤ 10 ft to eliminate concerns about hydration temperatures in such mass concrete.

Table 5.5. Square block dimensions for 4 in, pipe, full pressure

Full pressure: [(WP = PC) + (P_{OS} = 1.0 × PC)]									
4 in. DIPS HDPE, $\delta_b \leq 0.50$ in.									
Depth to pipe crown (ft)	DR11				DR17				
	Medium dense		Dense		Medium dense		Dense		
	Warm	*Cold*	*Warm*	*Cold*	*Warm*	*Cold*	*Warm*	*Cold*	
	L_b = 12 in.				L_b = 12 in.				
3.5	2.5	2.5	2.5	2.5	2.5	2.5	2.5	2.5	
4.0	2.5	2.5	2.5	2.5	2.5	2.5	2.5	2.5	
5.0	2.5	2.5	2.5	2.5	2.5	2.5	2.5	2.5	
6.0	2.5	2.5	2.5	2.5	2.5	2.5	2.5	2.5	
7.0	2.5	2.5	2.5	2.5	2.5	2.5	2.5	2.5	
8.0	2.5	2.5	2.5	2.5	2.5	2.5	2.5	2.5	
9.0	2.5	2.5	2.5	2.5	2.5	2.5	2.5	2.5	
10.0	2.5	2.5	2.5	2.5	2.5	2.5	2.5	2.5	
11.0	2.5	2.5	2.5	2.5	2.5	2.5	2.5	2.5	
12.0	2.5	2.5	2.5	2.5	2.5	2.5	2.5	2.5	
4 in. IPS HDPE**,** $\delta_b \leq 0.50$ in.									
Depth to pipe crown (ft)	DR11				DR17				
	Medium dense		Dense		Medium dense		Dense		
	Warm	*Cold*	*Warm*	*Cold*	*Warm*	*Cold*	*Warm*	*Cold*	
	L_b = 12 in.				L_b = 12 in.				
3.5	2.5	2.5	2.5	2.5	2.5	2.5	2.5	2.5	
4.0	2.5	2.5	2.5	2.5	2.5	2.5	2.5	2.5	
5.0	2.5	2.5	2.5	2.5	2.5	2.5	2.5	2.5	
6.0	2.5	2.5	2.5	2.5	2.5	2.5	2.5	2.5	
7.0	2.5	2.5	2.5	2.5	2.5	2.5	2.5	2.5	
8.0	2.5	2.5	2.5	2.5	2.5	2.5	2.5	2.5	
9.0	2.5	2.5	2.5	2.5	2.5	2.5	2.5	2.5	
10.0	2.5	2.5	2.5	2.5	2.5	2.5	2.5	2.5	
11.0	2.5	2.5	2.5	2.5	2.5	2.5	2.5	2.5	
12.0	2.5	2.5	2.5	2.5	2.5	2.5	2.5	2.5	

2.5 ft is the minimum block size for 4 in. pipe based on the geometric constraints in Fig. 5.1.

Table 5.6. Square block dimensions for 8 in, pipe, full pressure

Full pressure: [(WP = PC) + (P_{OS} = 1.0 × PC)]									
8 in. DIPS HDPE, $\delta_b \leq 0.50$ in.									
Depth to pipe crown (ft)	DR11				DR17				
	Medium dense		Dense		Medium dense		Dense		
	Warm	*Cold*	*Warm*	*Cold*	*Warm*	*Cold*	*Warm*	*Cold*	
	L_b = 16 in.				L_b = 14 in.				
3.5	3.0	3.0	3.0	3.0	3.0	3.0	3.0	3.0	
4.0	3.0	3.0	3.0	3.0	3.0	3.0	3.0	3.0	
5.0	3.0	3.0	3.0	3.0	3.0	3.0	3.0	3.0	
6.0	3.0	3.0	3.0	3.0	3.0	3.0	3.0	3.0	
7.0	3.0	3.0	3.0	3.0	3.0	3.0	3.0	3.0	
8.0	3.0	3.0	3.0	3.0	3.0	3.0	3.0	3.0	
9.0	3.0	3.0	3.0	3.0	3.0	3.0	3.0	3.0	
10.0	3.0	3.0	3.0	3.0	3.0	3.0	3.0	3.0	
11.0	3.0	3.0	3.0	3.0	3.0	3.0	3.0	3.0	
12.0	3.0	3.0	3.0	3.0	3.0	3.0	3.0	3.0	
8 in. IPS HDPE**,** $\delta_b \leq 0.50$ in.									
Depth to pipe crown (ft)	DR11				DR17				
	Medium dense		Dense		Medium dense		Dense		
	Warm	*Cold*	*Warm*	*Cold*	*Warm*	*Cold*	*Warm*	*Cold*	
	L_b = 14 in	L_b = 16 in	L_b = 14 in	L_b = 16 in	L_b = 14 in.				
3.5	3.0	3.0	3.0	3.0	3.0	3.0	3.0	3.0	
4.0	3.0	3.0	3.0	3.0	3.0	3.0	3.0	3.0	
5.0	3.0	3.0	3.0	3.0	3.0	3.0	3.0	3.0	
6.0	3.0	3.0	3.0	3.0	3.0	3.0	3.0	3.0	
7.0	3.0	3.0	3.0	3.0	3.0	3.0	3.0	3.0	
8.0	3.0	3.0	3.0	3.0	3.0	3.0	3.0	3.0	
9.0	3.0	3.0	3.0	3.0	3.0	3.0	3.0	3.0	
10.0	3.0	3.0	3.0	3.0	3.0	3.0	3.0	3.0	
11.0	3.0	3.0	3.0	3.0	3.0	3.0	3.0	3.0	
12.0	3.0	3.0	3.0	3.0	3.0	3.0	3.0	3.0	

3.0 ft is the minimum block size for 8 in. pipe based on the geometric constraints in Fig. 5.1.

Table 5.7. Square block dimensions for 12 in, pipe, full pressure

Full pressure: [(WP = PC) + (P_{OS} = 1.0 × PC)]									
12 in. DIPS HDPE, $\delta_b \leq 0.50$ in.									
Depth to pipe crown (ft)	DR11				DR17				
	Medium dense		Dense		Medium dense		Dense		
	Warm	*Cold*	*Warm*	*Cold*	*Warm*	*Cold*	*Warm*	*Cold*	
	L_b = 18 in.	L_b = 20 in.	L_b = 18 in.	L_b = 20 in.	L_b = 16 in.				
3.5	-	-	3.5	4.0	3.5	4.0	3.5	3.5	
4.0	4.0	4.5	3.5	3.5	3.5	3.5	3.5	3.5	
5.0	4.0	4.0	3.5	3.5	3.5	3.5	3.5	3.5	
6.0	3.5	3.5	3.5	3.5	3.5	3.5	3.5	3.5	
7.0	3.5	3.5	3.5	3.5	3.5	3.5	3.5	3.5	
8.0	3.5	3.5	3.5	3.5	3.5	3.5	3.5	3.5	
9.0	3.5	3.5	3.5	3.5	3.5	3.5	3.5	3.5	
10.0	3.5	3.5	3.5	3.5	3.5	3.5	3.5	3.5	
11.0	3.5	3.5	3.5	3.5	3.5	3.5	3.5	3.5	
12.0	3.5	3.5	3.5	3.5	3.5	3.5	3.5	3.5	
12 in. IPS HDPE**,** $\delta_b \leq 0.50$ in.									
Depth to pipe crown (ft)	DR11				DR17				
	Medium dense		Dense		Medium dense		Dense		
	Warm	*Cold*	*Warm*	*Cold*	*Warm*	*Cold*	*Warm*	*Cold*	
	L_b = 18 in.				L_b = 16 in.				
3.5	-	-	3.5	3.5	3.5	3.5	3.5	3.5	
4.0	4.0	4.0	3.5	3.5	3.5	3.5	3.5	3.5	
5.0	3.5	4.0	3.5	3.5	3.5	3.5	3.5	3.5	
6.0	3.5	3.5	3.5	3.5	3.5	3.5	3.5	3.5	
7.0	3.5	3.5	3.5	3.5	3.5	3.5	3.5	3.5	
8.0	3.5	3.5	3.5	3.5	3.5	3.5	3.5	3.5	
9.0	3.5	3.5	3.5	3.5	3.5	3.5	3.5	3.5	
10.0	3.5	3.5	3.5	3.5	3.5	3.5	3.5	3.5	
11.0	3.5	3.5	3.5	3.5	3.5	3.5	3.5	3.5	
12.0	3.5	3.5	3.5	3.5	3.5	3.5	3.5	3.5	

3.5 ft is the minimum block size for 12 in. pipe based on the geometric constraints in Fig. 5.1.

Table 5.8. Square block dimensions for 18 in, pipe, full pressure

Full pressure: [(WP = PC) + (P_{OS} = 1.0 × PC)]									
18 in. DIPS HDPE, $\delta_b \leq 0.50$ in.									
Depth to pipe crown (ft)	DR11				DR17				
	Medium dense		Dense		Medium dense		Dense		
	Warm	*Cold*	*Warm*	*Cold*	*Warm*	*Cold*	*Warm*	*Cold*	
	L_b = 24 in.				L_b = 20 in.				
3.5	-	-	-	-	-	-	4.5	4.5	
4.0	-	-	5.0	5.0	5.0	5.5	4.0	4.5	
5.0	5.5	6.0	4.5	5.0	4.5	4.5	4.0	4.0	
6.0	5.0	5.0	4.5	4.5	4.0	4.5	4.0	4.0	
7.0	4.5	5.0	4.0	4.0	4.0	4.0	4.0	4.0	
8.0	4.5	4.5	4.0	4.0	4.0	4.0	4.0	4.0	
9.0	4.5	4.5	4.0	4.0	4.0	4.0	4.0	4.0	
10.0	4.0	4.0	4.0	4.0	4.0	4.0	4.0	4.0	
11.0	4.0	4.0	4.0	4.0	4.0	4.0	4.0	4.0	
12.0	4.0	4.0	4.0	4.0	4.0	4.0	4.0	4.0	
18 in. IPS HDPE**,** $\delta_b \leq 0.50$ in.									
Depth to pipe crown (ft)	DR11				DR17				
	Medium dense		Dense		Medium dense		Dense		
	Warm	*Cold*	*Warm*	*Cold*	*Warm*	*Cold*	*Warm*	*Cold*	
	L_b = 22 in.	L_b = 24 in	L_b = 22 in	L_b = 24 in	L_b = 18 in.	L_b = 20 in.	L_b = 18 in.	L_b = 20 in.	
3.5	-	-	-	-	-	-	4.0	4.0	
4.0	-	-	4.5	4.5	5.0	5.0	4.0	4.0	
5.0	5.0	5.5	4.0	4.5	4.5	4.5	3.5	3.5	
6.0	4.5	5.0	4.0	4.0	4.5	4.0	3.5	3.5	
7.0	4.5	4.5	3.5	4.0	3.5	4.0	3.5	3.5	
8.0	4.0	4.5	3.5	3.5	3.5	3.5	3.5	3.5	
9.0	4.0	4.0	3.5	3.5	3.5	3.5	3.5	3.5	
10.0	4.0	4.0	3.5	3.5	3.5	3.5	3.5	3.5	
11.0	3.5	4.0	3.5	3.5	3.5	3.5	3.5	3.5	
12.0	3.5	3.5	3.5	3.5	3.5	3.5	3.5	3.5	

4.0 ft is the minimum block size for 18 in. DIPS, 3.5 ft for 18 in. IPS pipe based on the geometric constraints in Fig. 5.1.

Table 5.9. Square block dimensions for 24 in, pipe, full pressure

Full pressure: [(WP = PC) + (P_{OS} = 1.0 × PC)]								
24 in. DIPS HDPE, $\delta_b \leq 0.50$ in.								
Depth to pipe crown (ft)	DR11				DR17			
	Medium dense		Dense		Medium dense		Dense	
	Warm	*Cold*	*Warm*	*Cold*	*Warm*	*Cold*	*Warm*	*Cold*
	L_b = 30 in.				L_b = 24 in.			
3.5	-	-	-	-	-	-	-	-
4.0	-	-	-	-	-	-	5.5	5.5
5.0	8.0	8.0	6.0	6.0	6.0	6.5	5.0	5.0
6.0	7.0	7.5	5.5	5.5	5.5	6.0	4.5	5.0
7.0	6.5	6.5	5.5	5.5	5.0	5.5	4.5	4.5
8.0	6.0	6.0	5.0	5.0	5.0	5.0	4.5	4.5
9.0	5.5	6.0	4.5	5.0	4.5	5.0	4.5	4.5
10.0	5.5	5.5	4.5	4.5	4.5	4.5	4.5	4.5
11.0	5.0	5.5	4.5	4.5	4.5	4.5	4.5	4.5
12.0	5.0	5.0	4.5	4.5	4.5	4.5	4.5	4.5
24 in. IPS HDPE, $\delta_b \leq 0.50$ in.								
Depth to pipe crown (ft)	DR11				DR17			
	Medium dense		Dense		Medium dense		Dense	
	Warm	*Cold*	*Warm*	*Cold*	*Warm*	*Cold*	*Warm*	*Cold*
	L_b = 28 in.				L_b = 22 in.			
3.5	-	-	-	-	-	-	-	-
4.0	-	-	6.0	6.0	-	-	5.0	5.0
5.0	7.0	7.5	5.5	5.5	5.5	6.0	4.5	5.0
6.0	6.5	6.5	5.5	5.5	5.0	5.5	4.5	4.5
7.0	6.0	6.0	5.0	5.0	5.0	5.0	4.0	4.5
8.0	5.5	5.5	4.5	4.5	4.5	4.5	4.0	4.0
9.0	5.0	5.5	4.5	4.5	4.5	4.5	4.0	4.0
10.0	5.0	5.0	4.5	4.5	4.0	4.5	4.0	4.0
11.0	5.0	5.0	4.0	4.0	4.0	4.0	4.0	4.0
12.0	4.5	4.5	4.0	4.0	4.0	4.0	4.0	4.0

4.5 ft is the minimum block size for 24 in. DIPS, 4.0 ft for 24 in. IPS pipe based on the geometric constraints in Fig. 5.1.

Table 5.10. Square block dimensions for 4 in, pipe, ⅔ pressure

⅔ pressure: [(WP = ⅔ × PC) + (P_{OS} = ⅔ × PC)]									
4 in. **DIPS** HDPE, $\delta_b \leq 0.50$ in.									
Depth to pipe crown (ft)	DR11				DR17				
	Medium dense		Dense		Medium dense		Dense		
	Warm	*Cold*	*Warm*	*Cold*	*Warm*	*Cold*	*Warm*	*Cold*	
	L_b = 12 in.				L_b = 12 in.				
3.5	2.5	2.5	2.5	2.5	2.5	2.5	2.5	2.5	
4.0	2.5	2.5	2.5	2.5	2.5	2.5	2.5	2.5	
5.0	2.5	2.5	2.5	2.5	2.5	2.5	2.5	2.5	
6.0	2.5	2.5	2.5	2.5	2.5	2.5	2.5	2.5	
7.0	2.5	2.5	2.5	2.5	2.5	2.5	2.5	2.5	
8.0	2.5	2.5	2.5	2.5	2.5	2.5	2.5	2.5	
9.0	2.5	2.5	2.5	2.5	2.5	2.5	2.5	2.5	
10.0	2.5	2.5	2.5	2.5	2.5	2.5	2.5	2.5	
11.0	2.5	2.5	2.5	2.5	2.5	2.5	2.5	2.5	
12.0	2.5	2.5	2.5	2.5	2.5	2.5	2.5	2.5	
4 in. IPS HDPE**,** $\delta_b \leq 0.50$ in.									
Depth to pipe crown (ft)	DR11				DR17				
	Medium dense		Dense		Medium dense		Dense		
	Warm	*Cold*	*Warm*	*Cold*	*Warm*	*Cold*	*Warm*	*Cold*	
	L_b = 12 in.				L_b = 12 in.				
3.5	2.5	2.5	2.5	2.5	2.5	2.5	2.5	2.5	
4.0	2.5	2.5	2.5	2.5	2.5	2.5	2.5	2.5	
5.0	2.5	2.5	2.5	2.5	2.5	2.5	2.5	2.5	
6.0	2.5	2.5	2.5	2.5	2.5	2.5	2.5	2.5	
7.0	2.5	2.5	2.5	2.5	2.5	2.5	2.5	2.5	
8.0	2.5	2.5	2.5	2.5	2.5	2.5	2.5	2.5	
9.0	2.5	2.5	2.5	2.5	2.5	2.5	2.5	2.5	
10.0	2.5	2.5	2.5	2.5	2.5	2.5	2.5	2.5	
11.0	2.5	2.5	2.5	2.5	2.5	2.5	2.5	2.5	
12.0	2.5	2.5	2.5	2.5	2.5	2.5	2.5	2.5	

2.5 ft is the minimum block size for 4 in. pipe based on the geometric constraints in Fig. 5.1.

Table 5.11. Square block dimensions for 8 in, pipe, ⅔ pressure

⅔ pressure: [(WP = ⅔ × PC) + (P_{OS} = ⅔ × PC)]								
8 in. DIPS HDPE, $\delta_b \leq 0.50$ in.								
Depth to pipe crown (ft)	DR11				DR17			
	Medium dense		Dense		Medium dense		Dense	
	Warm	*Cold*	*Warm*	*Cold*	*Warm*	*Cold*	*Warm*	*Cold*
	L_b = 14 in.				L_b = 12 in.			
3.5	3.0	3.0	3.0	3.0	3.0	3.0	3.0	3.0
4.0	3.0	3.0	3.0	3.0	3.0	3.0	3.0	3.0
5.0	3.0	3.0	3.0	3.0	3.0	3.0	3.0	3.0
6.0	3.0	3.0	3.0	3.0	3.0	3.0	3.0	3.0
7.0	3.0	3.0	3.0	3.0	3.0	3.0	3.0	3.0
8.0	3.0	3.0	3.0	3.0	3.0	3.0	3.0	3.0
9.0	3.0	3.0	3.0	3.0	3.0	3.0	3.0	3.0
10.0	3.0	3.0	3.0	3.0	3.0	3.0	3.0	3.0
11.0	3.0	3.0	3.0	3.0	3.0	3.0	3.0	3.0
12.0	3.0	3.0	3.0	3.0	3.0	3.0	3.0	3.0
8 in. IPS HDPE**,** $\delta_b \leq 0.50$ in.								
Depth to pipe crown (ft)	DR11				DR17			
	Medium dense		Dense		Medium dense		Dense	
	Warm	*Cold*	*Warm*	*Cold*	*Warm*	*Cold*	*Warm*	*Cold*
	L_b = 14 in.				L_b = 12 in.			
3.5	3.0	3.0	3.0	3.0	3.0	3.0	3.0	3.0
4.0	3.0	3.0	3.0	3.0	3.0	3.0	3.0	3.0
5.0	3.0	3.0	3.0	3.0	3.0	3.0	3.0	3.0
6.0	3.0	3.0	3.0	3.0	3.0	3.0	3.0	3.0
7.0	3.0	3.0	3.0	3.0	3.0	3.0	3.0	3.0
8.0	3.0	3.0	3.0	3.0	3.0	3.0	3.0	3.0
9.0	3.0	3.0	3.0	3.0	3.0	3.0	3.0	3.0
10.0	3.0	3.0	3.0	3.0	3.0	3.0	3.0	3.0
11.0	3.0	3.0	3.0	3.0	3.0	3.0	3.0	3.0
12.0	3.0	3.0	3.0	3.0	3.0	3.0	3.0	3.0

3.0 ft is the minimum block size for 8 in. pipe based on the geometric constraints in Fig. 5.1.

Table 5.12. Square block dimensions for 12 in, pipe, ⅔ pressure

⅔ pressure: [(WP = ⅔ × PC) + (P_{OS} = ⅔ × PC)]									
12 in. DIPS HDPE, $\delta_b \leq 0.50$ in.									
Depth to pipe crown (ft)	DR11				DR17				
	Medium dense		Dense		Medium dense		Dense		
	Warm	*Cold*	*Warm*	*Cold*	*Warm*	*Cold*	*Warm*	*Cold*	
	L_b = 16 in.				L_b = 14 in.				
3.5	4.0	4.0	3.5	3.5	3.5	3.5	3.5	3.5	
4.0	3.5	3.5	3.5	3.5	3.5	3.5	3.5	3.5	
5.0	3.5	3.5	3.5	3.5	3.5	3.5	3.5	3.5	
6.0	3.5	3.5	3.5	3.5	3.5	3.5	3.5	3.5	
7.0	3.5	3.5	3.5	3.5	3.5	3.5	3.5	3.5	
8.0	3.5	3.5	3.5	3.5	3.5	3.5	3.5	3.5	
9.0	3.5	3.5	3.5	3.5	3.5	3.5	3.5	3.5	
10.0	3.5	3.5	3.5	3.5	3.5	3.5	3.5	3.5	
11.0	3.5	3.5	3.5	3.5	3.5	3.5	3.5	3.5	
12.0	3.5	3.5	3.5	3.5	3.5	3.5	3.5	3.5	
12 in. IPS HDPE**,** $\delta_b \leq 0.50$ in.									
Depth to pipe crown (ft)	DR11				DR17				
	Medium dense		Dense		Medium dense		Dense		
	Warm	*Cold*	*Warm*	*Cold*	*Warm*	*Cold*	*Warm*	*Cold*	
	L_b = 16 in.				L_b = 14 in.				
3.5	3.5	3.5	3.5	3.5	3.5	3.5	3.5	3.5	
4.0	3.5	3.5	3.5	3.5	3.5	3.5	3.5	3.5	
5.0	3.5	3.5	3.5	3.5	3.5	3.5	3.5	3.5	
6.0	3.5	3.5	3.5	3.5	3.5	3.5	3.5	3.5	
7.0	3.5	3.5	3.5	3.5	3.5	3.5	3.5	3.5	
8.0	3.5	3.5	3.5	3.5	3.5	3.5	3.5	3.5	
9.0	3.5	3.5	3.5	3.5	3.5	3.5	3.5	3.5	
10.0	3.5	3.5	3.5	3.5	3.5	3.5	3.5	3.5	
11.0	3.5	3.5	3.5	3.5	3.5	3.5	3.5	3.5	
12.0	3.5	3.5	3.5	3.5	3.5	3.5	3.5	3.5	

3.5 ft is the minimum block size for 12 in. pipe based on the geometric constraints in Fig. 5.1.

Table 5.13. Square block dimensions for 18 in, pipe, ⅔ pressure

⅔ pressure: [(WP = ⅔ × PC) + (P_{OS} = ⅔ × PC)]									
18 in. DIPS HDPE, $\delta_b \leq 0.50$ in.									
Depth to pipe crown (ft)	DR11				DR17				
	Medium dense		Dense		Medium dense		Dense		
	Warm	*Cold*	*Warm*	*Cold*	*Warm*	*Cold*	*Warm*	*Cold*	
	L_b = 20 in.				L_b = 16 in.	L_b = 18 in.	L_b = 16 in.	L_b = 18 in.	
3.5	-	-	4.5	4.5	4.5	5.0	4.0	4.0	
4.0	5.0	5.5	4.5	4.5	4.5	4.5	4.0	4.0	
5.0	4.5	5.0	4.0	4.0	4.0	4.0	4.0	4.0	
6.0	4.5	4.5	4.0	4.0	4.0	4.0	4.0	4.0	
7.0	4.0	4.5	4.0	4.0	4.0	4.0	4.0	4.0	
8.0	4.0	4.0	4.0	4.0	4.0	4.0	4.0	4.0	
9.0	4.0	4.0	4.0	4.0	4.0	4.0	4.0	4.0	
10.0	4.0	4.0	4.0	4.0	4.0	4.0	4.0	4.0	
11.0	4.0	4.0	4.0	4.0	4.0	4.0	4.0	4.0	
12.0	4.0	4.0	4.0	4.0	4.0	4.0	4.0	4.0	
18 in. IPS HDPE, $\delta_b \leq 0.50$ in.									
Depth to pipe crown (ft)	DR11				DR17				
	Medium dense		Dense		Medium dense		Dense		
	Warm	*Cold*	*Warm*	*Cold*	*Warm*	*Cold*	*Warm*	*Cold*	
	L_b = 20 in.				L_b = 16 in.				
3.5	-	-	4.0	4.5	4.0	4.5	3.5	3.5	
4.0	5.0	5.0	4.0	4.0	4.0	4.0	3.5	3.5	
5.0	4.5	4.5	3.5	4.0	3.5	4.0	3.5	3.5	
6.0	4.0	4.0	3.5	3.5	3.5	3.5	3.5	3.5	
7.0	4.0	4.0	3.5	3.5	3.5	3.5	3.5	3.5	
8.0	3.5	4.0	3.5	3.5	3.5	3.5	3.5	3.5	
9.0	3.5	3.5	3.5	3.5	3.5	3.5	3.5	3.5	
10.0	3.5	3.5	3.5	3.5	3.5	3.5	3.5	3.5	
11.0	3.5	3.5	3.5	3.5	3.5	3.5	3.5	3.5	
12.0	3.5	3.5	3.5	3.5	3.5	3.5	3.5	3.5	

4.0 ft is the minimum block size for 18 in. DIPS, 3.5 ft for 18 in. IPS pipe based on the geometric constraints in Fig. 5.1.

Table 5.14. Square block dimensions for 24 in, pipe, ⅔ pressure

⅔ pressure: [(WP = ⅔ × PC) + (P_{OS} = ⅔ × PC)]									
24 in. DIPS HDPE, $\delta_b \leq 0.50$ in.									
Depth to pipe crown (ft)	DR11				DR17				
	Medium dense		Dense		Medium dense		Dense		
	Warm	*Cold*	*Warm*	*Cold*	*Warm*	*Cold*	*Warm*	*Cold*	
	L_b = 24 in.	L_b = 26 in.	L_b = 24 in.	L_b = 26 in.	L_b = 20 in.				
3.5	-	-	-	-	-	-	4.5	5.0	
4.0	-	-	5.5	6.0	5.5	6.0	4.5	5.0	
5.0	6.5	7.0	5.0	5.5	5.0	5.5	4.5	4.5	
6.0	5.5	6.0	5.0	5.0	4.5	5.0	4.5	4.5	
7.0	5.0	5.5	4.5	5.0	4.5	4.5	4.5	4.5	
8.0	5.0	5.0	4.5	4.5	4.5	4.5	4.5	4.5	
9.0	5.0	5.0	4.5	4.5	4.5	4.5	4.5	4.5	
10.0	4.5	5.0	4.5	4.5	4.5	4.5	4.5	4.5	
11.0	4.5	4.5	4.5	4.5	4.5	4.5	4.5	4.5	
12.0	4.5	4.5	4.5	4.5	4.5	4.5	4.5	4.5	
24 in. IPS HDPE, $\delta_b \leq 0.50$ in.									
Depth to pipe crown (ft)	DR11				DR17				
	Medium dense		Dense		Medium dense		Dense		
	Warm	*Cold*	*Warm*	*Cold*	*Warm*	*Cold*	*Warm*	*Cold*	
	L_b = 22 in.	L_b = 24 in.	L_b = 22 in.	L_b = 24 in.	L_b = 18 in.	L_b = 20 in	L_b = 18 in	L_b = 20 in	
3.5	-	-	-	-	-	-	4.5	5.0	
4.0	-	-	5.0	5.5	5.5	5.5	4.5	4.5	
5.0	6.0	6.5	5.0	5.0	4.5	5.0	4.0	4.0	
6.0	5.0	5.5	4.5	4.5	4.5	4.5	4.0	4.0	
7.0	5.0	5.0	4.5	4.5	4.0	4.5	4.0	4.0	
8.0	4.5	5.0	4.0	4.0	4.0	4.0	4.0	4.0	
9.0	4.5	4.5	4.0	4.0	4.0	4.0	4.0	4.0	
10.0	4.5	4.5	4.0	4.0	4.0	4.0	4.0	4.0	
11.0	4.0	4.5	4.0	4.0	4.0	4.0	4.0	4.0	
12.0	4.0	4.5	4.0	4.0	4.0	4.0	4.0	4.0	

4.5 ft is the minimum block size for 24 in. DIPS, 4.0 ft for 24 in. IPS pipe based on the geometric constraints in Fig. 5.1.

Table 5.15. Summary of square anchor block sizes for 8 and 24 in. DIPS DR11 and DR17 HDPE pipe (Full pressure, Dense soil, *Warm* and *Cold* temperature zones)

Pipe size (in.)	Block size (ft) for **8 in. DIPS DR11**							
	Full pressure: [(WP = PC) + (P_{OS} = 1.0 × PC)]							
	Dense soil							
	Warm temperature zone				*Cold* temperature zone			
	L_b (in.)	Depth to pipe crown, z_c (ft)			L_b (in.)	Depth to pipe crown, z_c (ft)		
		3.5 to 5	6 to 8	9 to 12		3.5 to 5	6 to 8	9 to 12
4	12	2.5	2.5	2.5	12	2.5	2.5	2.5
8	16	3.0	3.0	3.0	16	3.0	3.0	3.0
12	18	3.5	3.5	3.5	20	3.5	3.5	3.5
18	24	5.0[a]	4.5-4.0	4.0	20	4.5-4.0	4.0	4.0
24	30	6.0[b]	5.5-5.0	4.5	30	6.0[a]-5.5	5.5-5.0	5.0-4.5

Pipe size (in.)	Block size (ft) for **24 in. DIPS DR17**							
	Full pressure: [(WP = PC) + (P_{OS} = 1.0 × PC)]							
	Dense soil							
	Warm temperature zone				*Cold* temperature zone			
	L_b (in.)	Depth to pipe crown, z_c (ft)			L_b (in.)	Depth to pipe crown, z_c (ft)		
		3.5 to 5	6 to 8	9 to 12		3.5 to 5	6 to 8	9 to 12
4	12	2.5	2.5	2.5	12	2.5	2.5	2.5
8	14	3.0	3.0	3.0	14	3.0	3.0	3.0
12	16	3.5	3.5	3.5	16	3.5	3.5	3.5
18	20	4.5[a]-4.0	4.0	4.0	20	4.5	4.0	4.0
24	24	5.5[b]-5.0	4.5	4.5	24	5.5[a]-5.0	4.5	4.5

a – Min. starts at z_c = 4.0 ft

b – Min. starts at z_c = 5.0 ft

Table 5.15 summarizes the block sizes, $H_b \times B_b \times L_b$ for DR11 and DR17, with full design water pressure in dense soil conditions for both *warm* and *cold* temperature zones. These conditions cover common situations for many design situations. Minimum $H_b \times B_b$ for pipes 12 in. and smaller DR11 and DR17 are the same, and $H_b \times B_b$ differences between DR11 and DR17 for large pipes are quite small. The block thicknesses do vary by several inches.

Block dimensions in many of the tables are the minimum sizes based on the geometric constraints shown in Figure 5.1 and listed in Table 5.1. This is particularly true of 4, 8, and 12 in. pipe sizes. As the depth to pipe crown increases and the soil gains more capacity, the block sizes also decrease, approaching, in many cases, the minimum geometric sizes.

What is not shown in the anchor block tables, are the factors of safety on soil capacity, FS_{cap}, and the estimated block displacements for the listed sizes. The minimum FS_{cap} for the block sizes shown in the tables above is *always* ≥ 1.5 and the maximum block displacement is *always* $\delta_b \leq 0.5$ in. To give the reader a sense for the factors of safety and displacements for the block sizes, Table 5.16 shows the calculated factors of safety on soil capacity and the estimated block displacements for DIPS 8 in. DR11 pipe and DIPS 24 in. DR17 pipe, along with the required block sizes, in cold and warm temperature zones, for full and ⅔ design water pressures. The factors of safety increase with depth, and generally are well above the minimum of 1.5. The estimated block displacements decrease significantly with depth and are well below any of the limits for which joint separation would be expected. When the calculated factors of safety are greater than 5.0, the value is listed as "> 5." When the estimated displacement is smaller than 0.1 in., the value is listed as "< 0.1 in." These trends hold for all of the pipe sizes investigated. This table indicates, to some degree, the level of conservatism for both capacity and allowable displacements that is included in the methodology. The conditions for the block sizes in Tables 5.15 and 5.16 cover many cases for conventional design of HDPE water piping.

Table 5.16. Calculated factors of safety and displacements for selected block sizes

Depth to pipe crown z_c (ft)	Block size (ft) for **8 in. DIPS DR11**					
	Full pressure: [(WP = PC) + (P_{OS} = 1.0 × PC)]					
	Dense soil					
	L_b = 16 in.					
	Warm temperature zone			*Cold* temperature zone		
	H_b (ft)	FS_{cap}	δ_{bh} (in.)	H_b (ft)	FS_{cap}	δ_{bh} (in.)
3.5	3.0	2.55	< 0.1	3.0	2.33	< 0.1
4.0	3.0	2.92	< 0.1	3.0	2.66	< 0.1
5.0	3.0	3.69	< 0.1	3.0	3.37	< 0.1
6.0	3.0	4.50	< 0.1	3.0	4.08	< 0.1
7.0	3.0	> 5	< 0.1	3.0	4.84	< 0.1
8.0	3.0	> 5	< 0.1	3.0	> 5	< 0.1
9.0	3.0	> 5	< 0.1	3.0	> 5	< 0.1
10.0	3.0	> 5	< 0.1	3.0	> 5	< 0.1
11.0	3.0	> 5	< 0.1	3.0	> 5	< 0.1
12.0	3.0	> 5	< 0.1	3.0	> 5	< 0.1
Depth to pipe crown,, z_c (ft)	Block size (ft) for **24 in. DIPS DR17**					
	Full pressure: [(WP = PC) + (P_{OS} = 1.0 × PC)]					
	Dense soil					
	L_b = 24 in.					
	Warm temperature zone			*Cold* temperature zone		
	H_b (ft)	FS_{cap}	δ_{bh} (in.)	H_b (ft)	FS_{cap}	δ_{bh} (in.)
3.5	-	-	-	-	-	-
4.0	5.5	1.78	0.21	5.5	1.62	0.26
5.0	5.0	1.75	0.20	5.0	1.60	0.24
6.0	4.5	1.57	0.22	5.0	1.89	0.17
7.0	4.5	1.82	0.17	4.5	1.67	0.20
8.0	4.5	2.08	0.13	4.5	1.90	0.15
9.0	4.5	2.34	0.11	4.5	2.14	0.13
10.0	4.5	2.60	< 0.1	4.5	2.38	0.11
11.0	4.5	2.88	< 0.1	4.5	2.63	< 0.1
12.0	4.5	3.16	< 0.1	4.5	2.88	< 0.1

5.5. Numbers of flex restraints

This section provides the total number of flex restraints and the number of rows required for the various conditions. The dimension of the restraints used for this report are shown in Figure 4.2, and the capacity of each individual restraint is 9,000 lb. Typical layouts for single and multiple rows of the restraints is shown in Figure 5.2. Table 5.17 gives the total number of restraints and the number of rows required for the pipe sizes and pressure conditions, full and ⅔ pressure, considered in this report. The number of restraints does not depend on the soil density or soil strength. It is important to note that the variety of flexible restraints available may change in terms of capacity and dimensions. The values in these tables apply to a specific geometry and capacity available at the time of this writing, but the general approach to the evaluations remains the same.

5.6. Steel reinforcement

The steel reinforcement required for the block sizes is given in this section. The methodology for the steel requirements according to ACI 318-19 has been provided in Section 4. The steel requirements for shrinkage/crack control on the active side of the block are the same for all concrete blocks. Four bars each 6 in. longer than the pipe OD and the same bar size as the primary flexural reinforcement should be used for shrinkage/crack control, and should be arranged diagonally around the pipe as shown in Figure 4.11. The primary reinforcement bars are full length, arranged in equal numbers above and below, and left and right of the pipe. The minimum concrete cover for the soil-side of the bars is 3 in. The minimum cover when the bars are adjacent to the pipe is 1.5 in. For small blocks, steel wire mesh may be acceptable, but the applicability of wire is not covered in this report.

When deciding on the bar size, there are several factors to consider. The size of the bars affects the development length, with smaller diameter bars having a smaller development length, so they may not require to have hooks at the ends of the bars. There is no single “best” selection of the number and size of the bars, other than the choice must be consistent with the requirements given in ACI 318-19. A company may have a preference for a particular size, or perhaps to minimize the number of bars. The additional labor cost of placing more bars may be offset by having fewer, larger bars.

Table 5.17. Number of flex restraints[a], full pressure

Full pressure: **[(**WP = PC) + (P_{OS} = 1.0 × PC)]														
		DIPS							**IPS**					
		DR11			**DR17**				**DR11**			**DR17**		
Pipe Size (in.)	Temp. zone	L_b (in.)	Total # restraints	# rows	L_b (in.)	Total # restraints	# rows		L_b (in.)	Total # restraints	# rows	L_b (in.)	Total # restraints	# rows
4	*Warm*	12	1	1	12	1	1		12	1	1	12	1	1
	Cold													
8	*Warm*	16	3	1	14	2	1		14	2	1	14	2	1
	Cold								16	3				
12	*Warm*	18	5	1	16	4	1		18	5	1	16	3	1
	Cold	20											4	
18	*Warm*	24	10	2	20	7	1		22	9	2	18	6	1
	Cold		11			8	2			10		20	7	
24	*Warm*	30	18	2	24	12	2		28	16	2	22	11	2
	Cold		19			13				17				
⅔ pressure: **[**(WP = ⅔ × PC) + (P_{OS} = ⅔ × PC)]														
4	*Warm*	12	1	1	12	1	1		12	1	1	12	11	1
	Cold													1
8	*Warm*	14	2	1	12	2	1		14	2	1	12	1	1
	Cold												2	1
12	*Warm*	16	4	1	14	3	1		16	4	1	14	3	1
	Cold													1
18	*Warm*	20	8	2	16	5	1		20	7	1	16	5	1
	Cold				18	6								5
24	*Warm*	24	13	2	20	9	1		22	11	2	18	8	1
	Cold	26	14			10			24	12		20		1

a – 9,000 lb capacity per restraint

Table 5.18 lists a few options for the primary flexural steel necessary for the pipe diameters and DRs considered in this report, in dense soil conditions and full water pressures. Not all of the possible options are given. In Table 5.18 a superscript "a" indicates that the bars require hooks, as detailed in Table 4.3. Otherwise, no superscript indicates that straight bars are acceptable. The block dimensions for each pipe size are those given in Tables 5.5 through 5.9. Where more than one choice is given, a reinforcement ratio was determined, where

$$\text{Reinforcement ratio, rr} = \frac{A_{s,\,provided}}{A_{s,\,to\,use}} \tag{5.1}$$

in which:

$A_{s,\,provided}$ is the actual steel area of the bars based on the number and size, and

$A_{s,\,to\,use}$ is defined in Eqn. 4.18 in the section on steel design flexural requirements.

The closer the calculated reinforcement ratio is to one, the more efficient the design. For example, an 8 in. pipe with a 3 ft anchor block has steel reinforcement ratio of rr = 1.20 for 4 hooked #5 bars **or** rr = 1.16 for 6 straight #4 bars, **or** rr = 1.06 for 10 straight #3 bars. A particular utility may have a preference for #5 bars and to bend the hooks on site. Preference likely would be for straight bars, but that choice would be left to the designer.

Table 5.18. Flexural steel requirement for DIPS DR11 and DR17, full pressure

Full pressure: [(WP = PC) + (P_{OS} = 1.0 × PC)]					
Dense soil					
	DR11		DR17		
	Warm and Cold		*Warm and Co*		
Pipe size (in.)	Block size $H_b \times B_b$ (ft)	Total number and size of steel bars	Block size $H_b \times B_b$ (ft)	Total number and size of steel bars	
4	2.5	6 #3 **or** 4 #4[a]	2.5	6 #3 **or** 4 #4[a]	
8	3.0	4 #5[a] **or** 6 #4 **or** 10 #3	3.0	4 #5[a] **or** 6 #4 **or** 10 #3	
12	3.5	8 #4	3.5	4 #5	
	4.0				
18	4.0	8 #5	4.0	4 #6[a] **or** 6 #5	
	4.5	8 #5	4.5	6 #6[a] **or** 8 #5	
	5.0	10 #5			
24	4.5	8 #6[a]	4.5	8 #5	
	5.0	8 #6	5.0	6 #6 **or** 10 #5	
	5.5	10 #6	5.5	10 #5	
	6.0	10 #6			

a – bars require hooks

Notes: **"or"** means that the steel reinforcement ratios, rr, are reasonably close.

Not all acceptable steel reinforcement options are shown in the table.

Section 6

Summary and Conclusions

6.1. Summary statements

This report presents recommended procedures that can be used by utility personnel to size anchor blocks for HDPE piping to resist anticipated forces with an adequate margin of safety on the force capacity and to limit tolerable movements to an attached segmented pipeline. The approach is based on reasonable and accepted approaches used in geotechnical engineering practice. Adequate latitude with the range of parameters is provided and recommendations for particular design values are given. The intent is to provide guidance for the rational sizing of anchor blocks and present a feasible engineering solution.

The structural design of the reinforced concrete anchor blocks was examined, and a design approach is presented consistent with the requirements of ACI 318-19 – Building Code Requirements for Structural Concrete. Anchor block structural design is similar to the design of reinforced concrete footings, with the primary difference being the mechanism of load transfer from the HDPE pipe the concrete. The anchor blocks rely on thermally welded flexible restraints to transfer the HDPE pipe load near the center of the block, which reduces the effective depth of the section as compared to a traditional footing. The restraints are offset from the block centerline, away from the passive side, to accommodate this reduction. The remaining aspects are similar to traditional reinforced concrete design.

6.2. Current design approaches

The approaches currently used are based on presumptive soil lateral bearing pressures. The conservative pressures can be used with little or no understanding of soil properties, and perhaps only a visual observation of the soil type. No factors of safety are given for the presumptive values, and an additional factor of safety should not be used with the allowable pressures. The forces considered in the design of HDPE piping are those due to the Poisson effect. Consideration of thermal effects frequently is mentioned in several of the design documents, but the specific temperatures that should be used are not specified. Anchor block sizes based on presumptive soil pressures are overly conservative and excessively large.

6.3. Recommended geotechnical method for anchor block sizes

The main forces in the pipe/soil system are presented, and a method given for estimating the capacity and displacements of concrete anchor blocks. On the active side of the block, Coulomb LEPs are used for the surcharge and soil weight (friction) earth forces. On the passive side, earth pressures and forces due to soil weight (friction) are determined using Kérisel & Abis (1990) LEP coefficients for a log spiral failure surface. Three-dimensional magnification factors for the active and passive anchor block forces, based on those given by Ovesen (1964) and Brinch Hansen (1966), are used with the lateral forces. These magnification factors depend on the block geometry and burial depth, and range from about $M \approx 1.6$ to 3.3 for small, shallow anchor blocks. When the calculated magnification factor is greater than 2, the factor is capped at $M_{max} = 2.0$.

The factor of safety against exceeding the lateral capacity FS_{cap}, is given in terms of the resisting forces (capacity) and the driving forces (demand). The horizontal components of the resisting and driving forces are used since the earth pressures include wall friction, δ_w, which causes the resultant active and passive forces acting against the block to be inclined. The friction forces along the block top, block base, block sides, and soil block sides and faces are not included when sizing the block. This is conservative to ignore the relatively small contribution of these forces. The driving forces are the thermal force in the pipe, the Poisson force in the pipe due to internal pressure, and the active earth pressure. The recommended $FS_{cap} = 1.5$.

The displacement of the block necessary to develop the full passive force depends on the height of the anchor block and density of the soil, and is given in terms of Y_p/H_b, where Y_p is the displacement required to mobilize the full passive force and the block height is H_b. Both a linear and a hyperbolic passive force-block displacement models are presented. In these models, the *demand* forces are used to calculate the displacement of the block, using both the linear or hyperbolic model. The hyperbolic model predicts smaller block displacements because of the curvature in the force-displacement model. The block transmits movement to an attached segmented pipeline, and the allowable opening of the attached jointed pipeline, δ_j, is a critical limiting condition. The block movement must be less than or equal to the allowable joint opening. Industry experts have reported that for routine design connections into PVC segmented pipes, the allowable joint opening could be as much as 0.75 in. Ductile iron (DI) movements for piping with ordinary push-on joints could

be 0.6 in., depending on pipe size. For the block sizes given in Section 5, the estimated displacements for acceptable block sizes are less than a limiting joint opening of 0.5 in.

6.4. Square anchor block sizes

The methodology given in this report uses soil properties consistent with compacted granular materials. Acceptable free-draining granular (cohesionless) backfills suitable for anchor blocks are listed. Soil types and placement (compaction) conditions are given that are consistent with the suggested methodology. Anchor block capacity increases substantially as the soil strength increases. Where possible, the backfill soil should be compacted to a dense physical state. The minimum burial depth for water pipe depends on the pipe diameter and the frost depth. The minimum frost depths for design are determined by local conditions or utility practices. Rather than set specific depths for sizing blocks, anchor block sizes are given for pipe crown depths from 3.5 ft to 12 ft, allowing the utility engineer to select the appropriate pipe/frost depth for their application.

Anchor block sizes are given for DIPS and IPS 4- through 24-in.-diameter DR11 and DR17 HDPE pipe. Design considerations include water pressures for a) full design pressure: [(WP = PC) + (P_{OS} = 1.0 × PC)], and b) ⅔ design pressure: [(WP = ⅔ × PC) + (P_{OS} = ⅔ × PC)]. For DR11 pipe, full design pressure is 400 psig. For DR17 pipe full design pressure is 250 psig. Block sizes are given for medium dense and dense soils in both *cold* and *warm* temperature zones. For all tabulated block sizes the minimum $FS_{cap} \geq 1.5$ and the estimated block displacement is $\delta_{bh} \leq 0.50$ in. For the approximately 1,600 block size evaluations presented in the tables in Section 5, in only about a dozen cases was the estimated displacement larger than 0.5 in. when the FS_{cap} was ≈ 1.5, so the block height had to be adjusted to meet both design criteria.

Table 6.1 provides a summary of the square anchor block sizes for DR11 and DR17 pipe in dense soils in cold temperature zones with an allowable block movement of δ_b (or δ_j) ≤ 0.50 in. The block thicknesses used in Table 6.1 are those given in Table 5.2 Table 6.1 would apply to well-compacted (typically ≥ 90% relative compaction using the applicable ASTM standard) soils listed in Table 5.2. Greater refinement of the required block sizes for other conditions is given in the tables provided in Section 5.

Table 6.1. Summary of square anchor block sizes for DIPS HDPE pipe

Full pressure: [(WP = PC) + (P_{OS} = 1.0 × PC)]									
Dense soil									
Pipe size (in.)		Temp. zone	Block size (ft) for **DIPS DR11**				Block size (ft) for **DIPS DR17**		
			Depth to pipe crown, z_c (ft)				Depth to pipe crown, z_c (ft)		
			3.5 – 5	6 – 8	9 – 12		3.5 – 5	6 – 8	9 – 12
4		*Warm*	2.5				2.5		
		Cold							
8		*Warm*	3.0				3.0		
		Cold							
12		*Warm*	3.5	3.5			3.5		
		Cold	4.0-3.5						
18		*Warm*	5.0[a]	4.5-4.0	4.0		4.5-4.0	4.0	
		Cold							
24		*Warm*	6.0[b]	5.5-5.0	4.5		5.5[a]-5.0	5.0-4.5	4.5
		Cold			5.0-4.5				

a – Min. starts at z_c = 4.0 ft

b – Min. starts at z_c = 5.0 ft

Note: The block thicknesses, L_b, used in this table are those given in Table 5.2.

Note that the block sizes given in Table 6.1 for warm and cold temperature zones are the same for 4- and 8-in.-diameter pipe, and are governed by the geometric constraints: height of soil cover above the block and concrete cover around the pipe. Even for larger pipes, the square block dimensions for warm and cold zones are within ½ ft of each other. When larger pipes are at deeper depths, the geometric constraints control the block dimensions.

6.5. Structural design of anchor blocks

The preceding sections describe a rational procedure to determine the required size of the anchor block. Using the square block size and loads on the HDPE pipe, the structural design can be completed. The structural design of the anchor blocks is based upon the requirements of ACI 318-19. The structural design is largely controlled by the two-way or punching shear capacity of the section and is conceptually similar to an isolated footing design.

The initial step in the structural design is the determination of the required number of flex restraint devices, which are used to transfer loads from the HDPE pipe to the anchor blocks. The design procedure offsets the flex restraints from the center of the anchor block (see Figure 4.3), increasing the effective depth. Once the required number of flex restraints is determined, the two-way shear capacity of anchor block can be determined. If the capacity is not sufficient, the thickness of the anchor block must be increased. The geotechnical parameters need to be reviewed if the anchor block size is changed in the design process.

The one-way and flexural capacity of the anchor block also needs to be confirmed. The load acting on the pipe in one-way shear and flexure is based upon the block dimensions and load applied to the pipe. The capacity of the section in one-way shear and flexure is similar to traditional reinforced concrete design. The required amount of reinforcing steel is determined from the flexural demand, and the minimum steel requirements. The minimum steel requirements are used to prevent cracking from temperature changes and concrete shrinkage. The final step in the design process is confirming the reinforcing steel has adequate development length and the detailing of additional steel around the pipe on the active face for crack control.

Table 6.2 summarizes the square block sizes, thicknesses, and flexural steel requirements for 4 to 24 in. DIPS DR11 and DR17 HDPE pipes. In this table, bar sizes are those for bars that do not require hooks. The steel bars are placed each way in the block. Block sizes for IPS pipe are roughly the same as those for DIPS pipe.

6.6. Conclusions

The methods currently used result in anchor blocks larger than those necessary based on accepted geotechnical engineering methods. Passive lateral earth pressure coefficients determined using the log spiral method and three-dimensional magnification factors for single anchors result in block sizes much smaller than those using presumptive, and very conservative, allowable lateral bearing pressures. Anchor block sizes using the recommended methodology also consider the block movements and tolerable level of deformation that can be sustained in an attached segmented pipeline. The movements associated with minimum anchor blocks for the 4- to 24-in.-diameter DR11 and DR17 HDPE pipes are substantially less than 0.5 in.

The concrete requirements for durability and environmental stability are given based on current ACI codes. Methods used for design checks on two-way punching shear and one-way shear are

given. Flexural steel requirements are described and methods presented to calculate the steel requirements for flexure and shrinkage and crack control.

Table 6.2 gives the required square anchor dimensions and block thicknesses for both DR11 and DR17 HDPE pipe with full WP and P_{OS} in a dense backfill in a both *warm* and *cold* temperature zones. The steel reinforcements given in Table 6.2 are for the specific block depths and sizes given. Changes in the block dimensions for a particular depth may change the reinforcing requirements from those given in Table 6.2. For example, consider a 24 in. DR17 pipe in a *cold* temperature zone with a pipe depth of z_c = 7 ft. The minimum block thickness is L_b = 24 in. with square block dimensions of $H_b \times B_b = 4.5$ (ft) and the block requires 8 #5 bars each way. If the square dimensions are increased to $H_b \times B_b = 5.0$ at the same pipe depth, the FSc_{ap} would *increase* and the block displacement would *decrease*, but the number of straight bars required would change to either 10 #5 bars or 14 #4 bars. This is because of the interdependencies of block size and depth on the pressures on the block, the contributory areas for the steel requirements for flexure, and the minimum steel percentage based on the block gross area.

Although the block characteristics given in Table 6.2 should be adequate to cover *most* applications, careful review of all of the geotechnical and structural considerations must be performed to assure the block design is consistent with the project demands.

Table 6.2. Summary of concrete anchor block dimensions and steel reinforcing

Square block sizes DIPS HDPE pipe for z_c = 3.5 to 12 ft in Dense soil, Full pressure: [(WP = PC) + (P_{OS} = 1.0 × PC)]										
		DR11								
		Warm temperature zone					*Cold* temperature zone			
DIPS pipe size (in.)		L_b (in.)	Depth to crown, z_c (ft)	Block size $H_b \times B_b$ (ft)	Steel bars (each way)		L_b (in.)	Depth to crown, z_c (ft)	Block size $H_b \times B_b$ (ft)	Steel bars (each way)
4		12	3.5 to 12	2.5	6 #3		12	3.5 to 12	2.5	6 #3
8		16	3.5 to 12	3.0	10 #3		16	3.5 to 12	3.0	10 #3
12		18	3.5 to 12	3.5	6 #4		20	3.5	4.0	12 #3
								4 to 12	3.5	
18		24	4	5.0	8 #6		24	4 to 5	5.0	8 #6
			5 to 6	4.5	10 #5			6	4.5	10 #5
			7 to 12	4.0	6 #6[a]			7 to 12	4.0	6 #6[a]
24		30	5	6.0	10 #6		30	5	6.0	14 #5
			6 to 7	5.5	12 #5			6 to 7	5.5	12 #5
			8	5.0	8 #6			8 to 9	5.0	12 #5
			9 to 12	4.5	10 #5			10 to 12	4.5	10 #5
		DR17								
		Warm temperature zone					*Cold* temperature zone			
DIPS pipe size (in.)		L_b (in.)	Depth to crown, z_c (ft)	Block size $H_b \times B_b$ (ft)	Steel bars (each way)		L_b (in.)	Depth to crown, z_c (ft)	Block size $H_b \times B_b$ (ft)	Steel bars (each way)
4		12	3.5 to 12	2.5	6 #3		12	3.5 to 12	2.5	6 #3
8		14	3.5 to 12	3.0	10 #3		14	3.5 to 12	3.0	10 #3
12		16	3.5 to 12	3.5	10 #3		20	3.5 to 12	3.5	10 #3
18		20	3.5	4.5	8 #5		20	3.5 to 4	4.5	8 #5
			4 to 12	4.0	6 #5			5 to 12	4.0	6 #5
24		24	4	5.5	10 #5		24	4	5.5	10 #5
			5	5.0	10 #5			5 to 6	5.0	10 #5
			6 to 12	4.5	8 #5			7 to 12	4.5	8 #5

a – requires hooked bars

References

ACI 207.1-21 (2022), Mass Concrete – Guide, American Concrete Institute, Farmington Hills, MI, 34 pp.

ACI 318-19 (2019), Building Code Requirements for Structural Concrete, American Concrete Institute, Farmington Hills, MI.

American Water Works Association (AWWA) M23 (2020). PVC Pipe – Design and Installation, 3rd Ed., Denver, CO.

American Water Works Association (AWWA) M42 (2013). Steel Water Storage Tanks, Denver, CO.

American Water Works Association (AWWA) M45 (2014). Fiberglass Pipe Design, 3rd Ed., Denver, CO.

American Water Works Association (AWWA) M55 (2020). PE Pipe-Design and Installation. 2nd Ed. Denver, CO.

ASCE/SEI 7-16 (2019), Minimum Design Loads and Associated Criteria for Buildings and Other Structures, American Society of Civil Engineers, Reston, VA.

ASTM A615/A615M-18e1 (2020) – Standard Specification for Deformed and Plain Carbon-Steel Bars for Concrete Reinforcement, ASTM International, West Conshohocken, PA,

ASTM A775/A775M-17 (2020) – Standard Specification for Epoxy-Coated Steel Reinforcing Bars, ASTM International, West Conshohocken, PA.

ASTM A934/A934M-16 (2020) – Standard Specification for Epoxy-Coated Prefabricated Steel Reinforcing Bars, ASTM International, West Conshohocken, PA.

ASTM A1055/A1055M-16 (2020) – Standard Specification for Zinc and Epoxy Dual-Coated Steel Reinforcing Bars, ASTM International, West Conshohocken, PA..

ASTM D7382-20 (2020) – Standard Test Methods for Determination of Maximum Dry Unit Weight of Granular Soils Using a Vibrating Hammer, ASTM International, West Conshohocken, PA.

ASTM D2487-17e1 (2017) – Standard Practice for Classification of Soils for Engineering Purposes (Unified Soil Classification System), ASTM International, West Conshohocken, PA.

ASTM D7382-20 (2020) – Standard Test Methods for Determination of Maximum Dry Unit Weight of Granular Soils Using a Vibrating Hammer, ASTM International, West Conshohocken, PA.

Brinch Hanson, J (1953). *Earth Pressures Calculation*, The Danish Technical Press, Institution of Danish Civil Engineers, Copenhagen.

Brinch Hanson, J (1966). Resistance of a rectangular anchor slab, Bulletin 21, The Danish Geotechnical Institute, Copenhagen, pp 12-13.

Caquot, A and J Kérisel (1948). Tables for the calculation of passive pressure, active pressure and bearing capacity of foundations, Gauthier-Villars, Paris.

Coulomb, CA (1776). Essai sur une Application des Règles des Maximis et Minimis à quelques Problèmes de Statique Relatifs a l'Architecture (An attempt to apply the rules of maxima and minima to several problems of stability related to architecture.) Memoires des l'Academie Royale pres Divers Savants, Vol 7, pp. 343-382.

Ductile Iron Pipe Research Association (DIPRA) (2016). Thrust Restraint Design for Ductile Iron Pipe, 7th Ed., Birmingham, AL, 22p.

Duncan, JM and R Mokwa (2001). Passive Earth Pressures: Theories and Tests, ASCE J. Geotech. Geoenviron. Eng., 127(3): pp. 248-257.

International Building Code - 2018 (2020). 4th Ed, Country Club Hills, IL.

Kérisel, J and E Absi (1990). *Active and Passive Pressure Tables*, 3rd Ed., A.A.Balkema, Rotterdam, 90p.

Lancellotta, R (2002). Analytical solution of passive earth pressure, Geotechnique, 52, No. 8, pg. 617–619.

Mokwa, RL (1999). Investigation of the Resistance of Pile Caps to Lateral Loading, PhD thesis, Virginia Polytechnic Institute and State University, Blacksburg, VA.

National Engineering Handbook (2005). Part 656, US Dept. of Agriculture, National Resources Conservation Services, 210-VI-NEH, 1st Ed.

NAVFAC DM7-02 (1986). Foundations & Earth Structures, Naval Facilities Engineering Command, Alexandria, VA.

Ohde, J. (1938). Zur Theorie des Erddruckes unter besonderer Berücksichtigung der Erddruck verteilung (Theorie of earth pressure with special reference to earth pressure distribution). *Die Bautechnik*, **16**, Heft 10/11, S. 150–159, Heft 13, S. 176–180, Heft 19, S. 241–245, Heft 25, S. 331–335, Heft 37, S. 480–487, Heft 42, S. 570–571, Heft 53/54, S. 753–761.

Ovesen, NK (1964). Anchor slabs, calculation methods and model tests, *Bulletin No. 16*, The Danish Geotechnical Institute, Copenhagen.

Plastics Pipe Institute (2008). Handbook of PE Pipe, Irving, TX, 620p.

Plastics Pipe Institute (2009). Polyethylene Piping Systems Field Manual for Municipal Water Applications, Irving, TX, 84p.

Plastics Pipe Institute, (2014). Method for Calculating an Estimated Weight-Per-Foot of Solid-Wall Plastic Pipe TR- 7, Irving, TX, 6 p.

Rankine, WJM (1857). On the stability of loose earth, Philosophical Transactions of the Royal Society of London, Vol. 147, pp. 9 – 27.

South Australian Water Corporation (SA) TG96 (2007). Guidelines for the Design of Anchors and Thrust Blocks on Buried Pipelines with Unrestrained Joints and for the Anchorage of Pipes on Steep Grades. Technical Guide TG96, Adelaide, SA,

Stewart, HE and Ö Bilgin (2020). Thermal Stresses in HDPE Water Pipe, report to Plastic Pipe Institute, Irving, TX, 57p.

Terzaghi, K (1943). *Theoretical Soil Mechanics*, John Wiley & Sons, NY, 510p.

Appendix A

Example anchor block size calculations

A.1. Basic parameters

Step-by-step calculations are given for two anchor block sizes. The examples are for 1) nominal DIPS 8 in. DR11 pipe with a WP = 200 psig and P_{OS} = 1.0 × WP and 2) DIPS 24 in. DR17 pipe with a WP = 125 psig and P_{OS} = 1.0 × WP. Each pipe has a depth of cover of z_c = 7 ft. The sizes used for these examples are those given in Table 5.6 for the 8 in. pipe and Table 5.9 for the 24 in. pipe. Table A.1 lists the parameters for the two examples. Table A.2 gives the calculated values. The "Comment" column in Tables A.1 and A.2 refer to equations used or additional information given on the pages following Table A.2 as Comments.

Table A.1. Parameters for the two anchor block size examples

Parameter	Example 1	Example 2	Comment
Pipe size	DIPS 8 in. DR 11	DIPS 24 in. DR 17	
Wall thickness, t	t = 0.823 in.	t = 1.518 in.	
Working pressure, WP = PC	WP = 200 psig	WP = 125 psig	
Occasional pressure surge, P_{OS} = 1.0 × PC	P_{OS} = 200 psig	P_{OS} = 125 psig	
Pipe depth to crown, z_c	z_c = 7.0 ft	z_c = 7.0 f	1
Thermal stress, σ_T (*Best Practices* construction in *Cold* temperature zone)	σ_T = 180 psi	σ_T = 180 psi	2
Soil cover above block, H_s	H_s = 5.88 ft	H_s = 5.83 ft	3
Block height, H_b	H_b = 3.0 ft	H_b = 4.5 ft	4
Block width, B_b	B_b = 3.0 ft	B_b = 4.5 ft	4
Block thickness, L_b	L_b = 16 in.	L_b = 24 in.	5
Net block area, $(A_b)_{net}$	$(A_b)_{net}$ = 8.55 ft^2	$(A_b)_{net}$ = 16.62 ft^2	6
Physical state of cohesionless soil backfill	Medium dense	Dense	
Soil friction angle, ϕ'	ϕ' = 35°	ϕ' = 40°	
Friction on concrete block faces, δ_w	$\delta_w \approx$ 12° (12.4°)	$\delta_w \approx$ 7° (6.8°)	7
Interface friction ratio, δ_w/ϕ'	δ_w/ϕ' = 0.35	δ_w/ϕ' = 0.17	
Soil unit weight, γ_t	γ_t = 115 pcf	γ_t = 125 pcf	
Concrete unit weight, γ_t	γ_t = 150 pcf	γ_t = 150 pcf	

A.2. Calculated values

Table A.2. Calculated values for the anchor block examples

Parameter	8 in. DR 11	24 in. DR 17	Comment
Active earth forces			
Coulomb active LEP coefficient, K_{aC}	$K_{aC} = 0.25$	$K_{aC} = 0.21$	8
Surcharge, $q_s = \gamma_t H_s$	$q_s = 676$ psf	$q_s = 728$ psf	
Active pressure from surcharge $\sigma_{as} = K_{aC} \times q_s$	$\sigma_{as} = 169$ psf	$\sigma_{as} = 151$ psf	
Active force from surcharge $P_{as} = \sigma_{as} \times (A_b)_{net}$	$P_{as} = 1{,}446$ lb	$P_{as} = 2{,}513$ lb	
Active pressure from soil weight $\sigma_{a\phi} = ½K_{aC}\gamma_t H_b$	$\sigma_{a\phi} = 43.1$ psf	$\sigma_{a\phi} = 58.4$ psf	
Active force from soil weight $P_{a\phi} = \sigma_{a\phi} \times (A_b)_{net}$	$P_{a\phi} = 369$ lb	$P_{a\phi} = 971$ lb	
Sum of the active forces, $P_a = P_{as} + P_{a\phi}$	$P_a = 1{,}815$ lb	$P_a = 3{,}484$ lb	
Relative block height, h/H $= H_s/(H_s+H_b)$	h/H = 0.34	h/H = 0.44	9
3-D Magnification factor, M	$M_{calc} = 2.99$ $M = M_{max} = 2.00$	$M_{calc} = 2.62$ $M = M_{max} = 2.00$	10
Active force magnified for 3-D effects, $F_a = M \times P_a$	$F_a = 3{,}629$ lb	$F_a = 6{,}967$ lb	
Horizontal component of active force, $F_{ah} = F_a\cos\delta_w$	$F_{ah} = 3{,}545$ lb	$F_{ah} = 6{,}918$ lb	
Vertical component of active force, $F_{av} = F_a\sin\delta_w$	$F_{av} = 779$ lb (down)	$F_{av} = 825$ lb (down)	
Passive earth forces			
Log spiral passive LEP coefficient, K_{ps}, for $\delta/\phi' = 1.0$	$K_{ps} = 10.12$	$K_{ps} = 18.25$	11
Reduction factor, R_{ps}, for K_{ps} as $f(\delta/\phi')$	$\delta/\phi' = 0.35$, $R_{ps} = 0.53$	$\delta/\phi' = 0.17$, $R_{ps} = 0.33$	12
Final K_{ps} for given δ/ϕ'	$K_{ps} = 5.37$	$K_{ps} = 6.03$	13
Passive pressure from surcharge, $\sigma_{ps} = K_{ps} \times q_s$	$\sigma_{ps} = 3{,}628$ psf	$\sigma_{ps} = 4{,}392$ psf	
Passive force from surcharge, $P_{ps} = \sigma_{ps} \times (A_b)_{net}$	$P_{ps} = 31{,}032$ psf	$P_{ps} = 72{,}995$ psf	

Table A.2. Calculated values for the anchor block examples (continued)

Parameter	8 in. DR 11	24 in. DR 17	Comment
Passive earth forces			
Passive pressure from soil weight, $\sigma_{p\phi} = ½K_{ps}\gamma_t H_b$	$\sigma_{p\phi}$ = 926 psf	$\sigma_{p\phi}$ = 1,697 psf	
Passive force from soil weight, $P_{p\phi} = \sigma_{p\phi} \times (A_b)_{net}$	$P_{p\phi}$ = 7,920 lb	$P_{p\phi}$ = 28,196 lb	
Sum of the passive forces, $P_p = P_{ps} + P_{p\phi}$	P_p = 38,952 lb	P_p = 101,191 lb	
Relative block height, h/H $= H_b/(H_s+H_b)$	h/H = 0.34	h/H = 0.44	
3-D Magnification factor, M	M_{calc} = 2.99 M = M_{max} = 2.00	M_{calc} = 2.62 M = M_{max} = 2.00	
Passive force magnified for 3-D effects, $F_p = M \times P_p$	F_p = 77,904 lb	F_p = 202,382 lb	
Horizontal component of passive force (*capacity*)	F_{ph} = 76,087 lb	F_{ph} = 200,959 lb	
Vertical component of passive force	F_{pv} = 16,729 lb (up)	F_{pv} = 23,963 lb (up)	
Mobilized forces and equilibrium			
Weight of soil above block, $W_s = H_b \times B_b \times L_b \times \gamma_t$	W_s = 2,703 lb (down)	W_s = 6,553 lb (down)	
Anchor block weight, $W_b = H_b \times B_b \times L_b \times \gamma_c$	W_b = 1,873 lb (down)	W_b = 6,966 lb (down)	14
Mobilized (inclined) passive force $= (F_p)_{mob} = (F_{ph})_{mob} / \cos \delta_w$	$(F_p)_{mob}$ = 24,967 lb	$(F_p)_{mob}$ = 121,230 lb	16
Mobilized horizontal force, $(F_{ph})_{mob} = F_T + F_v + F_{ah}$ = 24,243 lb	$(F_{ph})_{mob}$ = 24,384 lb	$(F_{ph})_{mob}$ = 120,377 lb	15
Mobilized vertical passive force $(F_{pv})_{mob} = (F_p)_{mob} \times \sin \delta_w$	$(F_{pv})_{mob}$ = 5,361 lb	$(F_{pv})_{mob}$ = 14,354 lb	17
$\Sigma F_{Up} = (F_{pv})_{mob}$	ΣF_{up} = 5,361 lb	ΣF_{up} = 14,354 lb	
$\Sigma F_{Down} = F_{av} + W_s + W_b$	ΣF_{down} = 5,356 lb	ΣF_{down} = 14,344 lb	
Net mobilized vertical force $= (F_v)_{net} = \Sigma F_{up} - \Sigma F_{down}$	$(F_v)_{net}$ = 6 lb ($\approx$ 0) (up) ✓	$(F_v)_{net}$ = 10 lb ($\approx$ 0) (up) ✓	18

Table A.2. Calculated values for the anchor block examples (completed)

Parameter	8 in. DR 11	24 in. DR 17	Comment
Factor of Safety			
Horizontal *capacity*, F_{ph}	F_{ph} = 76,087 lb	F_{ph} = 200,959 lb	
Thermal force, F_T	F_T = 3,828 lb	F_T = 20,839 lb	
Poisson force, F_ν	F_ν = 17,012 lb	F_ν = 92,619 lb	
Horizontal component of active force, F_{ah}	F_{ah} = 3,545 lb	F_{ah} = 6,918 lb	
Horizontal *demand*, F_{Dh}	$F_{Dh} = F_T + F_\nu + F_{ah}$ = 24,384 lb	$F_{Dh} = F_T + F_\nu + F_{ah}$ = 120,377 lb	
Factor of Safety against exceeding the soil capacity, FS_{cap}	$FS_{cap} = F_{ph}/F_{Dh}$ =3.12✓ OK	$FS_{cap} = F_{ph}/F_{Dh}$ = 1.67 ✓ OK	
Displacements			
Passive displacement to mobilize full passive pressure, Y_p/H_b	Medium dense, Y_p/H_b = 0.03	Dense Y_p/H_b = 0.02	19
Block height, H_b	H_b = 3.0 ft	H_b = 4.5 ft	
Displacement for 100% passive force, Y_p, as f(H_b)	Y_p = 1.08 in.	Y_p = 1.08 in.	
Allowable joint displacement, δ_j	δ_j = 0.50 in.	δ_j = 0.50 in.	20
Hyperbolic model parameters, R_f and X	R_f = 0.800, X = 5.00	R_f = 0.850, X = 6.67	21
Block displacement, δ_{bh}	δ_{bh} = 0.09 in. ✓ OK	δ_{bh} = 0.20 in. ✓ OK	22

A.3. Comments

1. z_c is the depth to the pipe crown. No minimum frost depth is provided in these recommendations so that each utility engineer can set the pipe depth based on local conditions, and as necessary to tie into existing lines.

2. Section 2.1.2 provides recommended thermal stresses in HDPE pipe that account for installation, relaxation, seasonal temperature changes, and rapid influx of cold water. These stresses account for the time-dependent viscoelastic properties of the HDPE, regional design temperature changes expected in different geographical zones in North America, and both *Typical* and *Best Practices* construction.

Final thermal stresses for *Typical* and *Best Practices* construction		
	Typical construction	*Best Practices* construction
Temperature zone	Final stress, σ_T (psi)	Final stress, σ_T (psi)
Warm	255	110
Moderate	290	150
Cold	300	180

3. The minimum recommended soil cover above the top of the block is H_s = 2 ft. The pipe is centered in the block, so the block soil cover depends on the pipe diameter and block size. The soil cover is $H_s = z_c + ½OD - \eta H_b$. η is the vertical position of the pipe within the block, typically centered so η = ½.

4. The block dimensions should be consistent with the recommendations provided in Section 5, and shown again in the inset figure. These minimum dimensions of the square block provide a concrete cover of at least 1 ft from the HDPE pipe in all directions.

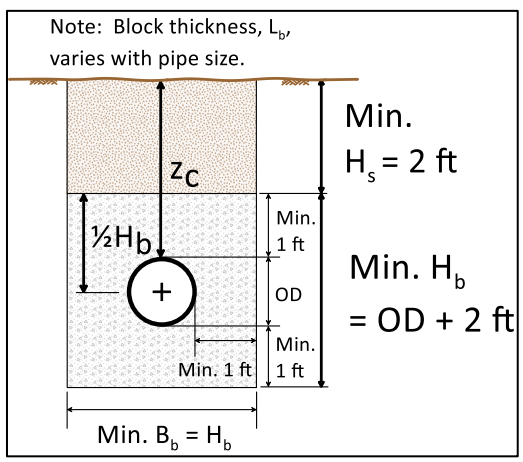

5. L_b for the geotechnical considerations affects the dead weight of the soil above the block and the block. These have a relatively minor effect on the block capacity. The structural evaluations check the necessary block thickness based on the ACI 318-19 provisions for two-way (punching) and one-way shear.

6. $(A_b)_{net} = H_b \times B_b - \pi OD^2/4$

Comments: (continued)

7. A reasonable starting wall friction would be $\delta_w = 12° \pm 5°$, with δ_w on the upper side for small blocks and the lower side for larger blocks.

8. K_{aC} is the Coulomb active earth pressure coefficient given in Eqn. 3.1 or estimated from Table 3.3.

9. h/H = Block relative height, $H_b/(H_s+H_b)$.

10. M_{calc} is the 3-D magnification factor given in Eqn. 3.13 or estimated from Fig. 3.9. If $M_{calc} > 2$, use $M_{max} = 2.0$. For the 8-in. pipe example $M_{calc} = 2.99$. For the 24-in. pipe example $M_{calc} = 2.62$. The inset figure shows M for dense and medium density soil. For medium density soil when $h/H < \approx 0.6$ $M = M_{max}$. For dense soil this limit is $h/H < \approx 0.85$.

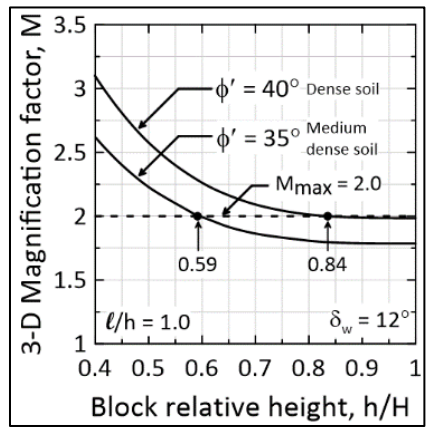

11. This K_{ps} value is the log spiral passive earth pressure coefficient for the maximum wall friction of $\delta_w/\phi' = 1.0$. This can be estimated from Fig. 3.6 or from Table 3.3.

12. R_{ps} is the reduction factor applied to K_{ps} from Comment 11 since $\delta_w/\phi' \neq 1.0$. This can be interpolated/estimated from Table 3.2.

13. The final value for the passive log spiral coefficient is $K_{ps} = (K_{ps}$ for $\delta_w/\phi' = 1.0) \times R_{ps}$.

14. The anchor block weight can be modified to account for the water-filled HDPE pipe, but this is a very minor detail.

15. Set the *mobilized* horizontal force, $(F_{ph})_{mob} = F_T + F_v + F_{ah}$ for horizontal equilibrium.

16. The mobilized passive (inclined) force, $(F_p)_{mob}$, $= (F_{ph})_{mob} / \cos \delta_w$.

17. The vertical component of the mobilized passive force, $(F_{pv})_{mob} = (F_p)_{mob} \times \sin \cos \delta_w$.

18. For vertical equilibrium, the wall friction is adjusted so that the *net* vertical force is near zero. A reasonable starting wall friction might be $\delta_w = 12° \pm 5°$, with δ_w on the upper side for small blocks and the lower side for larger blocks.

19. Y_p/H_b are ratios used the estimate the block displacements necessary to develop the *full* passive soil resistances. See Table 3.6.

20. The ductile iron and PVC industry reported these values as acceptable joint openings.

Comments: (completed)

21. R_f and X are shape factors used to describe the hyperbolic force-displacement curve for the anchor block.

22. The displacements are estimated using the hyperbolic model described in Section 3.7.2. The limiting hyperbolic model force is the *capacity*, F_{ph}. The displacements, δ_{bh}, are calculated at a force equal to the *demand*, $F_{Dh} = F_T + F_v + F_{ah}$.

Appendix B

Concrete structural design examples

B.1. Introduction

This appendix presents the concrete design for anchor blocks sized for two HDPE pipes. The pipe sizes and conditions are the same as the two examples given in Appendix A, where the anchor block dimensions were determined. The examples are for 1) nominal DIPS 8 in. DR11 pipe with a WP = 200 psi and P_{OS} = 1.0 × WP in a medium density soil and 2) DIPS 24 in. DR17 pipe with a WP = 125 psi and P_{OS} = 1.0 × WP in a dense soil. Each pipe has a depth of cover of z_c = 7 ft. The sizes used for these examples are those given in Table 5.6 for the 8 in., pipe and Table 5.9 for the 24 in. pipe. Table B.1 lists the relevant parameters for the concrete design. Refer to Appendix A for the geotechnical parameters used in the two examples.

Table B.1. Anchor block parameters for the concrete design examples

Parameter	Example 1	Example 2
Pipe size	8 in., DIPS, DR 11	24 in., DIPS, DR 17
Pipe OD (in.)	OD = 9.05 in.	OD = 25.8 in.
Soil cover, H_s	H_s = 5.88 ft	H_s = 5.83 ft
Block height, H_b	H_b = 3.0 ft	H_b = 4.5 ft
Block width, B_b	B_b = 3.0 ft	B_b = 4.5 ft
Block thickness, L_b	L_b = 16 in.	L_b = 24 in.
Net block area, $(A_b)_{net}$	$(A_b)_{net}$ = 8.55 ft^2	$(A_b)_{net}$ = 16.62 ft^2
Thermal force, F_T (cold temp zone)	F_T = 3,828 lb	F_T = 20,839 lb
Poisson force, F_ν	F_ν = 17,012 lb	F_ν = 92,619 lb
Horizontal component of active force, F_{ah}	F_{ah} = 3,503 lb	F_{ah} = 6,918 lb

The general concrete, reinforcing steel, and other concrete design parameters are given below.

f_c' = 5,000 psi normal weight concrete

f_y = 60,000 psi (uncoated – ASTM A615)

#5 bars having a diameter of d_b = 0.625 in. and a cross-sectional area of a_b = 0.31 in.^{2}

cc = 3 in. clear cover on the reinforcing steel closest to the soil.

B.2. Example 1 – Anchor block for 8 in. DIPS DR11 HDPE pipe

The procedure below is based upon ACI 318-19 (2019). Similar results will be obtained using earlier versions of ACI 318. The primary loading is the axial load from the thermal force, F_T, and Poisson force, F_v. As stated in Section 5, the structural design of the anchor blocks is conceptually similar to the design of a reinforced concrete footing. Figure B.1 conceptually shows the footing analogy for a pipe having <u>one</u> row of flexible restraints placed with the left edge in the figure at the center of the block. The combined load due to the thermal and Poisson forces is $T_{nominal}$. This force is transferred to the annular ring of restraints via electrofusion welds between the restraints and the pipe. This annular ring of restraints then acts as the "base" of a circular column.

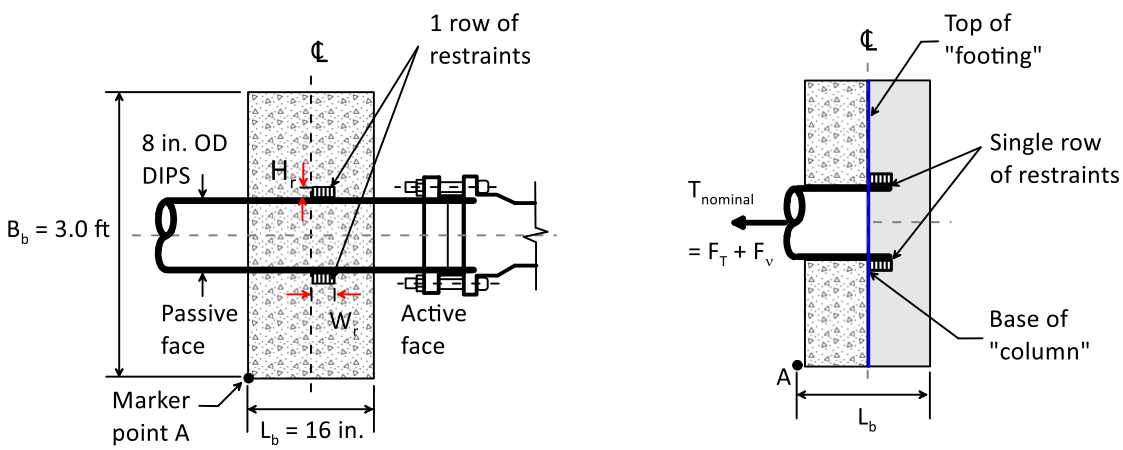

a) Plan of pipe with restraints

b) Footing analog

Figure B.1. Anchor block schematic for structural design of 8 in. pipe example

B.2.1. 8 in. Step 1 - Determine the number of restraint devices.

There are several varieties of flexible restraints available that can be electrofused to HDPE pipe. The restraint devices, described in Section 5, for this example have the following geometric properties and load capacity:

- H_r = load transfer device height normal to pipe surface = 1.6 in.
- W_r = load transfer device width along the length of pipe = 2.45 in.
- L_r = load transfer length per device = 7.95 in. These will provide the annular collar or ring around the pipe through which the axial load is transferred to the anchor block.
- Service capacity per device = 9,000 lb.

The capacity of these restraints must resist the axial load, $T_{nominal}$.

$T_{nominal}$ = (F_T = 3,828 lb) + (F_v =17,012 lb) = 20,840 lb (See Table 2.3, DR11, full pressures in a cold temperature zone).

$$\frac{T_{nominal} = F_T + F_v = 20{,}840 \text{ lb}}{9{,}000 \text{ lb per restraint}} = 2.3 \text{ round up to 3 restraints required} \qquad \text{(B.1)}$$

The number of restraint devices per row is determined by providing as many restraint devices as will fit around the circumference of the pipe. If this number of restraint devices is not adequate to transfer the load, then a second row of restraint devices must be added.

For this example:

$$\#\text{ restraints per perimeter} = \frac{\pi \text{ OD}}{L_r} = \frac{\pi \times 9.05 \text{ in.}}{7.95 \text{ in.}} = 3.6 \text{ restraints per perimeter} \qquad \text{(B.2)}$$

Round down to a maximum of 3 restraint devices per row. Since three restraints are required to meet the axial load, and there can be a maximum of three per row, only one row of restraints is required.

Three restraint devices × 9,000 lb/restraint device = 27,000 lb service > $T_{nominal}$ = 20,840 lb therefore one row of restraints is acceptable. The restraints selected have a width of 2.45 in. so there is adequate space for one row of the restraints within the block.

B.2.2. 8-in. Step 2 - Pressure distributions

The equations for determining the unfactored pressures on the passive and active face of the anchor blocks were given in Section 5, Table 5.2. The calculated values for these pressures are given in Table B.2.

Table B.2. Pressures on active and passive faces for 8-in. pipe example

PASSIVE FACE

$$\left(q_P\right)_{avg} = \frac{F_T + F_v + F_{ah}}{\left(A_b\right)_{net}} = \frac{\left(3{,}828 + 17{,}012 + 3{,}545\right)\text{lb}}{8.55\ \text{ft}^2} = 2{,}852\ \text{psf}$$

$$\beta = \frac{\left(q_P\right)_{avg}}{z = \left(H_s + H_b/2\right)} = \frac{2{,}852\ \text{psf}}{\left(5.88 + 3.0/2\right)\text{ft}} = 386.4\ \text{psf/ft}$$

$$q_{PM} = \left(q_P\right)_{avg} + \beta\left(OD/2\right) = \left(q_P\right)_{avg} + \beta\frac{\left(9.05/2\right)\text{in.}}{12\ \text{in./ft.}} = 2{,}997\ \text{psf}$$

$$q_{P1} = \left(q_P\right)_{avg} + \beta\left(OD/2 + d_{tb}\right) = \left(q_P\right)_{avg} + \beta\frac{\left(9.05/2 + 0.625\right)\text{in.}}{12\ \text{in./ft.}} = 3{,}137\ \text{psf}$$

$$q_{Pb} = \left(q_P\right)_{avg} + \beta\left(H_b/2\right) = q_{Pb} = \left(q_P\right)_{avg} + \beta\left(3.0/2\right)\text{ft} = 3{,}431\ \text{psf}$$

Average passive face q for flexural moment $= \left(q_{PM}\right)_{avg} = \dfrac{q_{PM} + q_{Pb}}{2} = 3{,}214\ \text{psf}$

Average passive face q for one-way shear $= \left(q_{P1}\right)_{avg} = \dfrac{q_{P1} + q_{Pb}}{2} = 3{,}284\ \text{psf}$

ACTIVE FACE

$$\left(q_A\right)_{avg} = \frac{F_{ah}}{\left(A_b\right)_{net}} = \frac{3{,}545\ \text{lb}}{8.55\ \text{ft}^2} = 414\ \text{psf}$$

$$\text{slope} = \gamma_t K_{aC} = 115\ \text{pcf} \times 0.25 = 28.8\ \text{psf/ft}$$

$$q_{AM} = \left(q_A\right)_{avg} + \gamma_t K_{aC}\left(OD/2\right) = \left(q_A\right)_{avg} + \gamma_t K_{aC}\frac{\left(9.05/2\right)\text{in.}}{12\ \text{in./ft.}} = 425\ \text{psf}$$

$$q_{A1} = \left(q_A\right)_{avg} + \gamma_t K_{aC}\left(OD/2 + d_{tb}\right) = \left(q_A\right)_{avg} + \gamma_t K_{aC}\frac{\left(9.05/2 + 0.625\right)\text{in.}}{12\ \text{in./ft.}} = 436\ \text{psf}$$

$$q_{Ab} = \left(q_A\right)_{avg} + \gamma_t K_{aC}\left(H_b/2\right) = \left(q_A\right)_{avg} + \gamma_t K_{aC}\left(3.0/2\right)\text{ft} = 452\ \text{psf}$$

Average active face q for flexural moment $= \left(q_{AM}\right)_{avg} = \dfrac{q_{AM} + q_{Ab}}{2} = 441\ \text{psf}$

Average active face q for one-way shear $= \left(q_{A1}\right)_{avg} = \dfrac{q_{A1} + q_{Ab}}{2} = 447\ \text{psf}$

NET PRESSURES

Net average $\left(q_{avg}\right)_{net} = \left(q_P\right)_{avg} - \left(q_A\right)_{avg} = 2{,}436\ \text{psf}$

Net average q for flexural moment $= \left(q_M\right)_{net} = \left(q_{PM}\right)_{avg} - \left(q_{AM}\right)_{avg} = 2{,}772\text{psf}$

Net average q for one-way shear $= \left(q_1\right)_{net} = \left(q_{P1}\right)_{avg} - \left(q_{A1}\right)_{avg} = 2{,}837\text{psf}$

B.2.3. 8 in. Step 3 – Two-way or punching shear

The thickness of the anchor block is checked based on punching shear requirements, using the provisions of ACI 318-19 Section 22.6 and described in Section 5. There are two parts to this evaluation. Part 2a evaluates the HDPE load that is transferred to the electrofused restraints within the anchor block. Part 2b compares the capacity of the anchor block to resist the factored soil pressure.

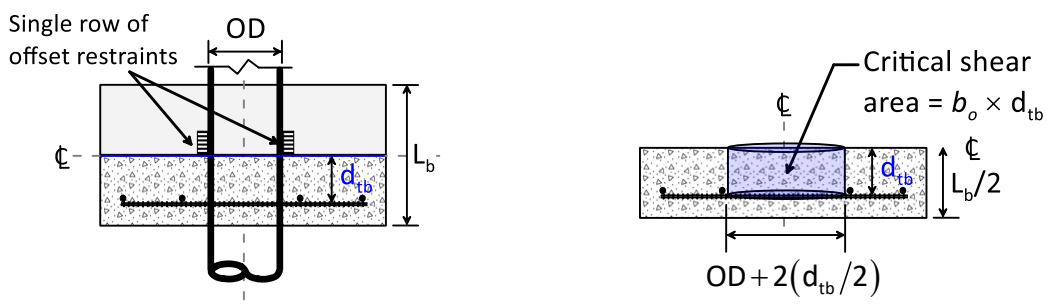

a) Position of restraints and d_{tb} b) Critical shear area

Figure B.2. Cross-section showing single row of restraints and effective depth, d_{tb}, for 8-in. pipe example

a) Conventional approach

Figure B.2a) shows a cross-section of the equivalent footing used in this example. Two layers of flexural steel reinforcing are used near the passive side of the anchor, with clear cover, cc = 3 in. Section 22.6.2.1 states that the effective depth for the calculation of v_c for two-way shear shall be the average of that for the two orthogonal directions. For square blocks, this depth is the same. The effective depth, d_{tb}, used for this example with one row of restraints is taken as the depth from the block centerline, the "top of footing", to the midpoint of the horizontal and vertical reinforcing bars. This distance is:

$$d_{tb} = \frac{L_b}{2} - cc - d_b = \frac{16\text{ in.}}{2} - 3\text{ in.} - 0.625\text{ in.} = 4.375\text{ in.} \tag{B.3}$$

in which:

d_{tb} = effective depth of anchor block in two-way shear = 4.375 in.

L_b = 1.33 ft = 16 in. trial thickness of the anchor block,

cc = 3 in. = clear cover for reinforcement steel, and

d_b = bar diameter = 0.625 for #5 bars.

The perimeter of the critical section for shear, b_o, shown in Figure B.2b) is taken as:

$$b_o = \pi \times \left[OD + 2\left(\frac{d_{tb}}{2}\right)\right] = \pi \times \left(OD + d_{tb}\right) \tag{B.4}$$

$$b_o = \pi \times \left(9.05\text{ in.} + 5.375\text{ in.}\right) = 42.2\text{ in.}$$

Design the anchor blocks as unreinforced concrete using:

$$\phi V_n \;=\; \phi V_c \;=\; \phi v_c b_o d_{tb} \tag{B.5}$$

in which:

ϕ = strength reduction factor = 0.75,

V_n = nominal shear strength (lb),

V_c = nominal shear strength provided by concrete (lb), and

v_c = stress corresponding to nominal two-way shear strength provided by concrete (psi).

Using Section 22.6.5.2 (and Table 22.6.5.2) of ACI 318-19, v_c is the smallest of:

$$\text{a)}\;\; v_c = 4\,\lambda_s\lambda\,\sqrt{f_c'} = 4\times1.0\times1.0\times\sqrt{5{,}000} \;=\; \underline{283\text{ psi}} \leftarrow \text{CONTROLS}$$

$$\text{b)}\;\; v_c = \left(2+\frac{4}{\beta}\right)\lambda_s\lambda\sqrt{f_c'} = \left(2+\frac{4}{1.0}\right)\times1.0\times1.0\times\sqrt{5{,}000} = \;424\text{ psi} \tag{B.6}$$

$$\text{c)}\;\; v_c = \left(2+\frac{\alpha_s d_{tb}}{b_o}\right)\lambda_s\lambda\,\sqrt{f_c'} = \left(2+\frac{40\times4.375\text{ in.}}{42.2\text{ in.}}\right)\times1.0\times1.0\times\sqrt{5{,}000} = \;435\text{ psi}$$

in which:

λ = 1.0 for normalweight concrete,

λ_s = size effect factor determined using Equation 22.5.5.1.3 in ACI 318-19,

$$\lambda_s = \sqrt{\frac{2}{1+\frac{d}{10}}} \le 1 \qquad \text{d units: in.} \tag{B.7}$$

λ_s = 1.0 for this example,

β = 1.0 for a round column, and

α_s = 40 for an interior “column”.

Therefore,

$$\phi V_c = \phi v_c b_o \mathrm{d_{tb}} = 0.75 \times 283 \text{ psi} \times 42.2 \text{ in.} \times 4.375 \text{ in.} = 39{,}142 \text{ lb}$$

ϕV_c represents the punching shear capacity of the section assuming no supplemental shear reinforcement is provided. This factored punching shear capacity, ϕV_c, must be greater than the factored service load, T_u. If not, the thickness of the anchor block would need to be increased.

- T_u = factored service load = 1.6 × ($T_{nominal}$ = 20,840 lb) = 33,343 lb. This axial load is considered to be a live load consistent with ASCE 7-16 (ASCE/SEI 2016).

$$\phi V_c = 39{,}142 \text{ lb} \geq \mathrm{T_u} = 33{,}343 \text{ lb} \checkmark \text{OK.}$$

and the thickness of the anchor block, L_b = 1.33 ft = 16 in. is satisfactory.

b) Alternate approach

This step is to confirm that the shear capacity of the anchor block is adequate to resist the factored soil pressure. The soil pressure located within $d_{tb}/2$ of the pipe is neglected in this calculation.

The *net average* pressure on the block passive face is:

$(q_{avg})_{net}$ = 2,436 psf (See Table B.2)

This net average pressure on the passive face must be multiplied by the live load factor. The loaded area at the bottom of the "footing", A_L, is the gross block area minus the area inside the shear perimeter, i.e., excluding the area within a distance $d_{tb}/2$ from the periphery of the pipe. This is shown in Figure B.3.

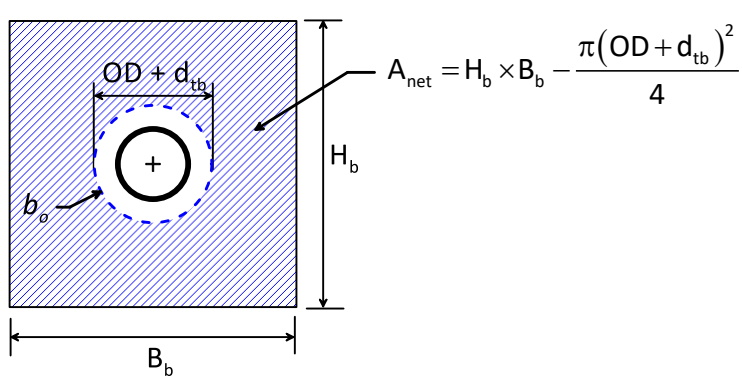

Figure B.3. Area to use for 8-in. pipe Step 2b check on punching shear

$$\text{Gross block area} = H_b \times B_b = 36\text{ in.} \times 36\text{ in.} = 1296.0\text{ in.}^2$$

$$\text{Area within the shear perimeter} = \frac{\pi \times (OD + d_{tb})^2}{4}$$

$$= \frac{\pi \times [9.05\text{ in.} + 4.375\text{ in.}]^2}{4} = 141.6\text{ in.}^2 \tag{B.8}$$

$$A_L = 1{,}296.0\text{ in.}^2 - 141.6\text{ in.}^2 = 1{,}145.4\text{ in.}^2 \times \frac{1\text{ ft}^2}{144\text{ in.}^2} = 8.02\text{ ft}^2$$

$$V_u = (\gamma = 1.6) \times (q_{avg})_{net} \times A_L = 1.6 \times (2{,}436\text{ psf}) \times 8.02\text{ ft}^2 = 31{,}253\text{ lb.} \tag{B.9}$$

Using this factored shear force V_u, the selected thickness of L_b =16 in. =1.33 ft is adequate since:

$\phi V_c = 39{,}142\text{ lb} \geq V_u = 31{,}253\text{ lb}$ ✓OK

B.2.4. 8 in. Step 4 - One-way shear

Verify the thickness of the anchor block based on one-way shear requirements, using the provisions of ACI 318-19 Section 22.5. Figure B.4 shows the terminology and dimensions used for the one-way shear example. The tributary area is located at the effective depth, d_{tb}, away from the edge of the pipe. The critical area for one-way shear is at the bottom of the block, as shown in Figure B.3 and described in Section 5.

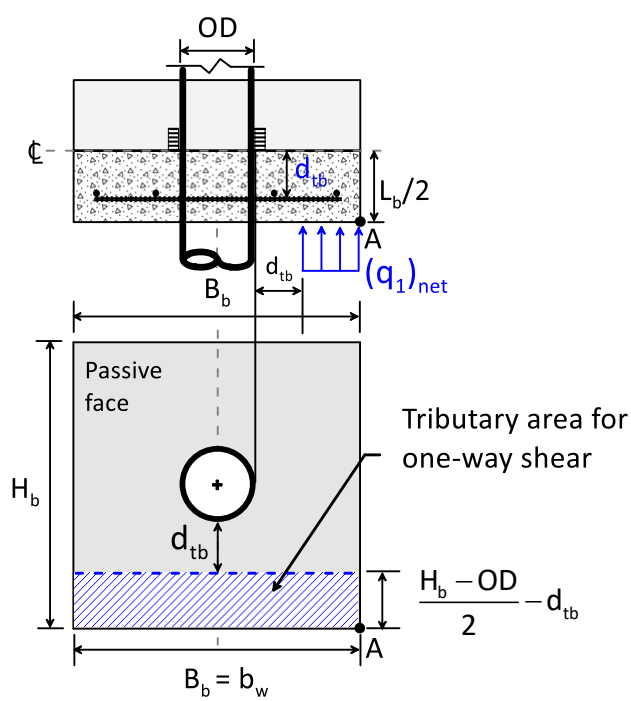

Figure B.4. One-way shear notation for 8-in. pipe example

Use equation (a) from Table 22.5.5.1 in ACI 318-19 as given below in Eqn. B.10. Further, because there are no additional axial forces, the $N_u/6A_g$ term drops out, leaving:

$$\text{(a)}\ V_c = 2\lambda\sqrt{f_c'} + \boxed{\frac{N_u}{6A_g} = 0}\, b_w d_{tb} \Rightarrow V_c = 2\lambda\sqrt{f_c'}\, b_w d_{tb} \tag{B.10}$$

in which:

λ = 1.0 for normal weight concrete, and

$b_w = H_b$ or B_b, the square foundation (anchor block) width or height.

Verify the thickness of the anchor blocks as unreinforced concrete, using

$$\phi V_c = \phi 2\lambda\sqrt{f_c'}\, b_w d_{tb} = 0.75 \times 2 \times (\lambda = 1.0) \times 70.7\ \text{psi} \times 36\ \text{in.} \times 4.375\ \text{in.} = 22,274\ \text{lb}$$

The factored, one-way shear, V_u is equal to the loaded area multiplied by the factored soil pressure and must be less than this ϕV_c or the thickness of the anchor block would need to be increased. The soil pressure located within d_{tb} of the face of the pipe is neglected in this calculation.

The *average net* pressure over the tributary area for one-way shear is:

$(q_1)_{net}$ = 2,837 psf (See Table B.2)

The loaded area for one-way shear, A_L is taken as:

$$A_L = \left[\frac{(B_b \text{ or } H_b) - OD}{2} - d_{tb}\right] \times (B_b \text{ or } H_b) \tag{B.11}$$

$$A_L = \left\{\frac{36\ \text{in.} - 9.05\ \text{in.}}{2} - 4.375\ \text{in.}\right\} \times 36\ \text{in.} = 327.6\ \text{in.}^2 \times \frac{1\ \text{ft}^2}{144\ \text{in.}^2} = 2.28\ \text{ft}^2$$

$V_u = (\gamma = 1.6) \times (q_1)_{avg} \times A_L = 1.6 \times (2,837\ \text{psf}) \times 2.28\ \text{ft}^2 = 10,328$ lb.

The design check compares ϕV_c with V_u, verifying the selected thickness of L_b =16 in. is adequate.

ϕV_c = 22,274 lb ≥ V_u = 10,328 lb ✓OK

Steps 2a, 2b, and 3 for two-way and one-way shear have verified that the dimensions of $H_b = B_b$ = 3 ft and L_b = 16 in. of the anchor block for the 8-in.-diameter DIPS HDPE DR11 pipe in this example are adequate based on ACI 318-19 design provisions. The next step is to evaluate the requirements for flexural reinforcement.

B.2.5. 8 in. Step 5 - Flexural reinforcement

Design the flexural reinforcement to resist the factored bending moment in the anchor block. It is important to note that here, that the effective depth, d, for flexural design is the *full* depth of the section from the compression face (active face) to the midpoint of the two layers of horizontal and vertical reinforcement bars close to the passive face. The factored design moment will be determined at the center of the anchor block. The loaded area that contributes to the bending moment is shown in Figure B.5.

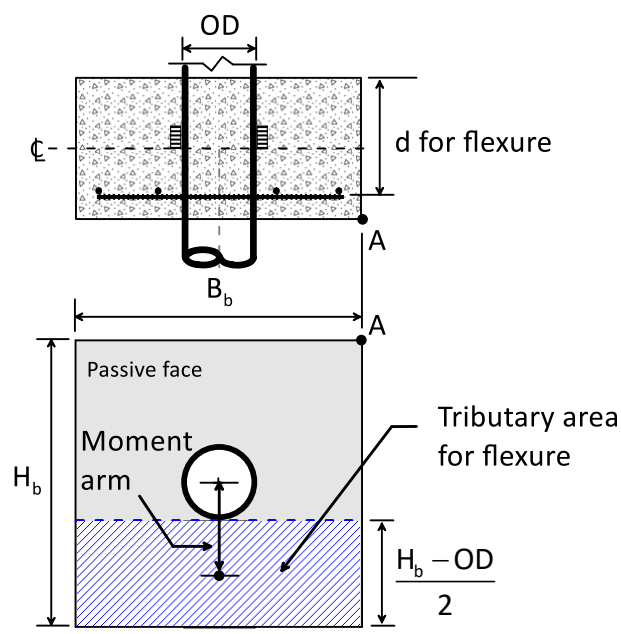

Figure B.5. Moment at center of anchor block for 8-in. pipe example

The *average net* pressures on the passive face used in the moment calculations is:

$(q_M)_{net}$ = 2,772 psf (See Table B.2)

The moment at the block center is:

$$M_u = \underbrace{(\gamma = 1.6) \times (q_M)_{net}}_{\text{Factored net pressure}} \times \underbrace{\frac{H_b - OD}{2} \times B_b}_{\text{Tributary area}} \times \underbrace{\left(\frac{OD}{2} + \frac{H_b + OD}{4}\right)}_{\text{Moment arm}} \tag{B.12}$$

The resulting moment is:

$$\left(q_M\right)_{net} = 2,772 \text{ psf}$$

$$\frac{H_b - OD}{2} = \frac{3 \text{ ft} - \left(9.05 \text{ in.} \times 1 \text{ ft}/12 \text{ in.}\right)}{2} = 1.12 \text{ ft}$$

$$\text{Tributary area} = 1.12 \text{ ft} \times \left(B_b = 3.0 \text{ ft}\right) = 3.36 \text{ ft}^2$$

$$\text{Moment arm} = \frac{OD}{2} + \frac{H_b - OD}{4} = \frac{\left(9.05 \text{ in.}/12 \text{ in.}/\text{ft}\right)}{2} + \frac{3 \text{ ft} - \left(9.05 \text{ in.}/12 \text{ in.}/\text{ft}\right)}{4} = 0.94 \text{ ft}$$

$$M_u = \left(\gamma = 1.6\right) \times 2,772 \text{ psf} \times 3.36 \text{ ft}^2 t \times 0.94 \text{ ft} \;=\; 14,024 \text{ lb-ft} = 14.0 \text{ k-ft}$$

Other values used for the design of the flexural reinforcement for this anchor block:

L_b = 16 in. which is the full thickness of the anchor block,

d = L_b – cc – d_b = 16 in. – 3 in. – 0.625 in. = 12.375 in., and

The capacity of the section in flexure, ϕM_n, is determined based upon the parameters given below. The factored moment must be less than the capacity of the section, i.e., $M_u \leq \phi M_n$. A moment reduction factor of ϕ = 0.9 is used. Table B.3 gives the parameters are used in the flexural steel calculations. In Table B.3 $A_g = H_b \times L_b$, the gross side area of the block.

Table B.3. Parameters for steel reinforcement for 8-in. pipe example

M_u (k-ft)	ϕ (assumed)	d (in.)	b_w (in.)	L_b (in.)	f' (psi)	f_y (psi)	A_g (in.^{2})
14.0	0.9	12.38	26.95	16	5,000	60,000	576

The flexural resistance factor in this example is:

$$R_{n,req'd} = \frac{M_u}{\phi\, b_w d^2} = \frac{14.0 \text{ k-ft} \times \left(1000 \text{ lb}/\text{k}\right) \times \left(12 \text{ in.}/\text{ft}\right)}{0.9(26.95 \text{ in.})(12.38\text{in.})^2} = 45.3 \text{ psi} \qquad \text{(B.13)}$$

The required steel ratio is given by:

$$\rho_{req'd} = \frac{0.85 f_c'}{f_y}\left(1 - \sqrt{1 - \frac{2R_{n,req'd}}{0.85 f_c'}}\right) = 0.00076 \qquad \text{(B.14)}$$

If $\rho_{req'd} < 0.0033$, use the smaller of $\frac{4 \times \rho_{req'd}}{3}$ or 0.0033 as $\rho_{to\,use}$, otherwise $\rho_{to\,use} = \rho_{req'd}$.

This example: Use $\frac{4 \times \rho_{req'd}}{3} = 0.00101$.

Next, the area of the reinforcing steel is calculated based on:

$$\begin{aligned} &A_{s,req'd} = \rho_{to\,use} = (0.00101)(\mathrm{d} \times \mathrm{b_w} = 12.38\text{ in.} \times 26.95\text{ in.}) = 0.338\text{ in.}^2 \\ &A_{s,min} = 0.0018 \times (A_g = \mathrm{L_b} \times \mathrm{H_b} = 576\text{ in.}^2) = 1.037\text{ in.}^2 \\ &A_{s,to\,use} = \text{the larger of } A_{s,req'd} \text{ or } A_{s,min}. \\ &\text{In this example } A_{s,to\,use} = 1.037\text{ in.}^2 \end{aligned} \tag{B.15}$$

Use #5 that have a cross-sectional area of a_b = 0.31 in.^{2}. The number of bars to use in *each* direction of the square block is:

$$\begin{aligned} &\#\text{ bars} = \frac{A_{s,\text{to use}}}{\mathrm{a_b}} = \frac{1.037\text{ in.}^2}{\#5\text{ bar area} = 0.31\text{ in.}^2} = 3.34\text{ bars} \\ &\text{Round up to an even number = 4 \#5 bars each way in the block.} \end{aligned} \tag{B.16}$$

The # bars is rounded up to an even number. The reinforcing layout will be symmetrical, so use 4 #5 bars in each direction on each face (2 above/below the pipe and 2 left/right of the pipe). The area of steel provided then is the rounded number of bars times the area per bar = 4 bars × 0.31in.^{2} per bar = 1.24 in.^{2} in this example.

Next, calculate the development length to determine if a straight reinforcing steel bars will be adequately developed at the critical section. If straight bars are not adequately developed, hooked bars must be used. The development length is calculated using ACI 318-19 Eqn. 25.4.2.4a for #6 and smaller bars. The equations below are used to calculate the required development length, ℓ_d. Design parameters used in these calculations are given in Table B.4.

Table B.4. Reinforcement and development parameters for 8-in. pipe example

c_b (in.)	cc (in.)	spacing (in.)	c_b/d_b	λ	ψ_c	ψ_e	ψ_g	ψ_o	ψ_r	ψ_s	ψ_t
3.31	3	8.35	2.5	1	0.93	1	1	1	1	0.8	1.3

The development length for straight, deformed bars in this example is:

$$\ell_d = \left[\frac{3}{40} \frac{f_y \psi_t \psi_e \psi_s \psi_g}{\lambda \sqrt{f'_c} \left(\frac{c_b + K_{tr}}{d_b} \right)} \right] d_b = 16.5 \text{ in. and use } K_{tr} = 0. \tag{B.17}$$

The available length in one side of the anchor block is half the block width or height minus the cover of the bars, or

$$\text{length available} = ½ \times \left(H_b \text{ or } B_b \right) - cc = ½ \left(36 \text{ in.} \right) - 3 \text{ in.} = 15 \text{ in.} \tag{B.18}$$

Since this required development length is too long for this block size, the #5 bars must have hooks. For hooked reinforcing bars, the development length, ℓ_{dh}, is the largest of the following equations, as give in ACI Section 25.4.3.1:

$$\begin{aligned} &\text{a) } \ell_{dh} = \left[\frac{f_y \psi_e \psi_r \psi_o \psi_c}{55 \lambda \sqrt{f'_c}} \right] d_b^{1.5} = 7.1 \text{ in.} \\ &\text{b) } \ell_{dh} = 8 d_b = 8 \times (0.635 \text{in.}) = 5.0 \text{ in., or} \\ &\text{c) } \ell_{dh} = 6 \text{ in.} \end{aligned} \tag{B.19}$$

Here, there is adequate development length (7.1 in.) for the hooked #5 bars. The maximum overall length of the hooked bars in this example would be ($B_b = H_b$ = 36 in.) – (2 × cc = 3 in.) = 30 in. The symbols used in Eqns. B.18 and B.19 were defined in Section 5. The values used are given above in Table B.4. The requirements for both 90° and 180° hooks are given in Table B.5.

An alternative to using 4 hooked #5 bars each way would be to use smaller #4 bars for reinforcement. Using these smaller diameter bars would require 6 #4 bars each way for the flexural reinforcement, but the required development length from Eqn. B.17 would be ℓ_d = 13.2 in. and the bars would *not* need hooks. This may be a more attractive option than using hooked #5 bars.

Table B.5. Standard hook development for deformed bars in tension (after ACI 318-19)

Type of standard hook	Bar size	Minimum inside bend diameter (in.)	Straight extension, ℓ_{ext} (in.)	Type of standard hook
90° hook	#3 through #8	6 d_b	12 d_b	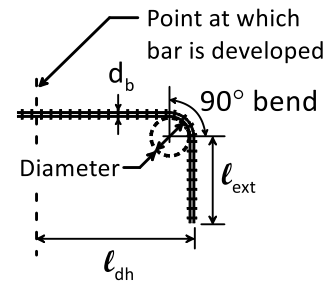
180° hook	#3 through #8	6 d_b	Greater of 4 d_b or 2.5 in.	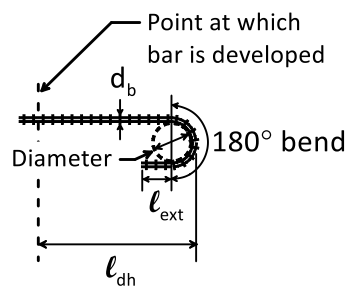

B.2.6. 8 in. Step 6 - Confirm section is tension-controlled

The final step in the design process is to confirm the section is tension controlled, and the 0.9 value is appropriate as a strength reduction factor. This is completed using the design value of the reinforcing steel area, $A_{s,\,prov}$, to determine depth of the concrete stress block, a.

$$a = \frac{A_{s,prov}\, f_y}{0.85\, f'_c\, b_w} = 0.63\,\text{in.} \tag{B.20}$$

Then, the stress block depth, a, from the above equation is divided by $\beta_1 = 0.8$, to determine the depth the neutral axis, c.

$$c = a / \beta_1 = 0.786 \text{ in.} \tag{B.21}$$

The depth the neutral axis is then used to calculate the strain in the reinforcing steel, ε_t, at ultimate strength, which must be greater 0.005 to use the $\phi = 0.9$ value as the strength reduction factor.

$$\varepsilon_c = \text{maximum concrete compressive strain} = 0.003,$$

$$\varepsilon_t = \text{steel tensile strain} = \varepsilon_c \times \frac{d-c}{c} = 0.003 \times \frac{12.375\text{ in.} - 0.786\text{ in.}}{0.786\text{ in.}} = 0.0447 \qquad \text{(B.22)}$$

Since 0.0447 > 0.005, use of $\phi = 0.9$ as the strength reduction factor is confirmed.

B.2.7. 8 in. Step 7 - Additional crack control reinforcement

The primary flexural reinforcing steel in the block is 4 #5 full length hooked bars in each direction, placed on either side of, above, and below the pipe. These bars should be uniformly spaced, considering concrete cover requirements at the soil edge and adjacent to the pipe. Additional, partial length reinforcing steel bars can be added in the central section near pipe.

In addition to the primary reinforcement used to resist applied loads, additional reinforcement is required around the HDPE pipe section at the active face to help prevent cracking. Four #5 bars should be placed around to pipe to act as crack control reinforcement. These bars are placed with 1 ½ in. of concrete cover between the pipe and the bar. Figure B.6 shows the final reinforcement near the passive and active faces.

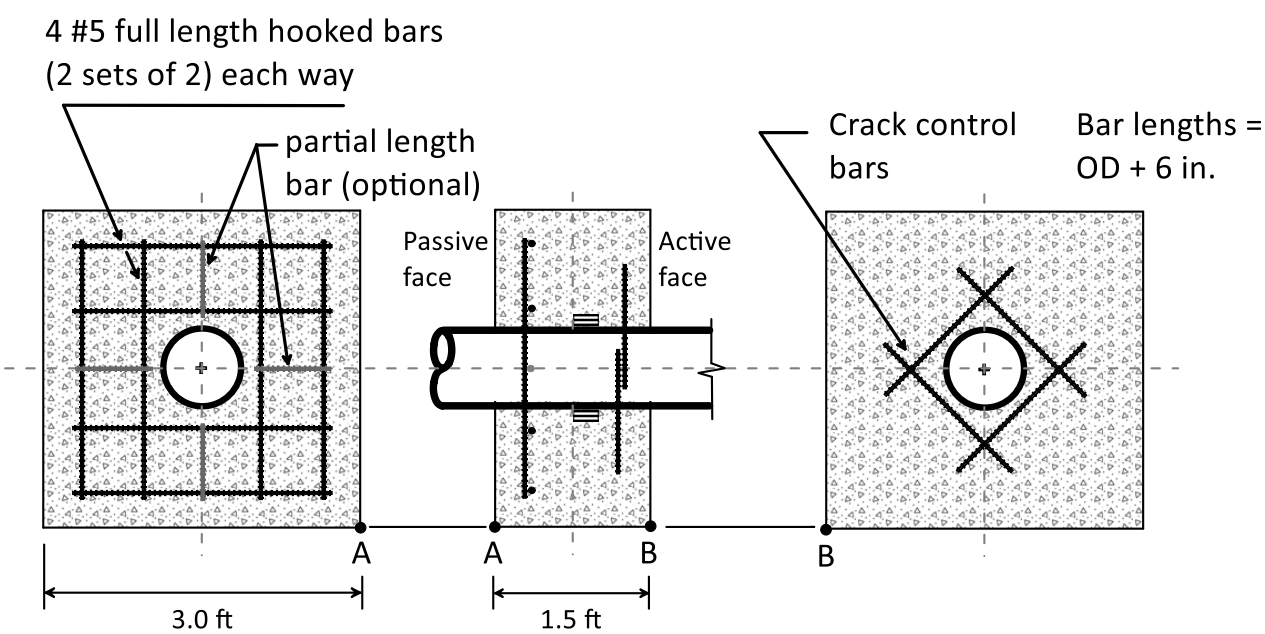

Figure B.6. Anchor block reinforcement for 8-in. pipe example

B.3. Example 2 – Anchor block for 24 in. DIPS DR17 HDPE pipe

The procedures for the 24 in.-diameter pipe in this section follow those given in the example for the 8-in.-diameter pipe. Many of the explanations used previously are not provided here to avoid unnecessary duplication.

B.3.1. 24 in. Step 1 - Determine the number of restraint devices.

The same restraint dimensions and capacity per restraint are used in this example. The capacity of these restraints must resist the axial load, $T_{nominal}$.

$T_{nominal}$ = (F_T = 20,839 lb) + (F_v = 92,619 lb) = 113,458 lb (See Table 2.3, DR17, full pressures in a cold temperature zone, rounded to 113,460 lb).

$$\frac{T_{nominal} = F_T + F_v = 113,458 \text{ lb}}{9,000 \text{ lb per restraint}} = 12.6 \text{ round up to 13 restraints required}$$

$$\#\text{ restraints} = \frac{\pi \text{ OD}}{L_r} = \frac{\pi \times 25.8 \text{ in.}}{7.95 \text{ in.}} = 10.2 \text{ restraints per perimeter}$$

Round down to a maximum of 10 restraint devices per row, so two rows of restraints are required. Thirteen restraint devices × 9,000 lb/restraint device = 117,000 lb service > $T_{nominal}$ = 113,458 lb, arranged in two rows. The restraint width of 2.45 in. plus a spacing of S_r = 2 in. gives a total width of the two rows of 6.9 in. One-half the block width minus 3 in. cover = 24/2-3 = 9 in. and the two rows have adequate space within the block.

B.3.2. 24-in. Step 2 - Pressure distributions

The equations for determining the unfactored pressures on the passive and active face of the anchor blocks were given in Section 5, Table 5.2. The calculated values for these pressures are given in Table B.6.

Table B.6. Pressures on active and passive faces for 24-in. pipe example

PASSIVE FACE

$$\left(q_P\right)_{avg} = \frac{F_T + F_v + F_{ah}}{\left(A_b\right)_{net}} = \frac{\left(20,839 + 92,619 + 6,918\right)\text{lb}}{16.62\ \text{ft}^2} = 7,243\ \text{psf}$$

$$\beta = \frac{\left(q_P\right)_{avg}}{z = \left(H_s + H_b/2\right)} = \frac{7,243\ \text{psf}}{\left(5.83 + 4.5/2\right)\text{ft}} = 897.0\ \text{psf/ft}$$

$$q_{PM} = \left(q_P\right)_{avg} + \beta\left(OD/2\right) = \left(q_P\right)_{avg} + \beta\frac{\left(25.8/2\right)\text{in.}}{12\ \text{in./ft.}} = 8,207\ \text{psf}$$

$$q_{P1} = \left(q_P\right)_{avg} + \beta\left(OD/2 + d_{tb}\right) = \left(q_P\right)_{avg} + \beta\frac{\left(25.8/2 + 0.625\right)\text{in.}}{12\ \text{in./ft.}} = 8,833\ \text{psf}$$

$$q_{Pb} = \left(q_P\right)_{avg} + \beta\left(H_b/2\right) = q_{Pb} = \left(q_P\right)_{avg} + \beta\left(4.5/2\right)\text{ft} = 9,261\ \text{psf}$$

Average passive face q for flexural moment $= \left(q_{PM}\right)_{avg} = \frac{q_{PM} + q_{Pb}}{2} = 8,734\ \text{psf}$

Average passive face q for one-way shear $= \left(q_{P1}\right)_{avg} = \frac{q_{P1} + q_{Pb}}{2} = 9,407\ \text{psf}$

ACTIVE FACE

$$\left(q_A\right)_{avg} = \frac{F_{ah}}{\left(A_b\right)_{net}} = \frac{3,503\ \text{lb}}{8.55\ \text{ft}^2} = 416\ \text{psf}$$

$$\text{slope} = \gamma_t K_{aC} = 115\ \text{pcf} \times 0.25 = 26.0\ \text{psf/ft}$$

$$q_{AM} = \left(q_A\right)_{avg} + \gamma_t K_{aC}\left(OD/2\right) = \left(q_A\right)_{avg} + \gamma_t K_{aC}\frac{\left(25.8/2\right)\text{in.}}{12\ \text{in./ft.}} = 444\ \text{psf}$$

$$q_{A1} = \left(q_A\right)_{avg} + \gamma_t K_{aC}\left(OD/2 + d_{tb}\right) = \left(q_A\right)_{avg} + \gamma_t K_{aC}\frac{\left(25.8 + 0.625\right)\text{in.}}{12\ \text{in./ft.}} = 462\ \text{psf}$$

$$q_{Ab} = \left(q_A\right)_{avg} + \gamma_t K_{aC}\left(H_b/2\right) = \left(q_A\right)_{avg} + \gamma_t K_{aC}\left(4.5/2\right)\text{ft} = 475\ \text{psf}$$

Average active face q for flexural moment = $\left(q_{AM}\right)_{avg} = \frac{q_{AM} + q_{Ab}}{2} = 459\ \text{psf}$

Average active face q for one-way shear = $\left(q_{A1}\right)_{avg} = \frac{q_{A1} + q_{Ab}}{2} = 468\ \text{psf}$

NET PRESSURES

Net average $\left(q_{avg}\right)_{net} = \left(q_P\right)_{avg} - \left(q_A\right)_{avg} = 6,827\ \text{psf}$

Net average q for flexural moment $= \left(q_M\right)_{net} = \left(q_{PM}\right)_{avg} - \left(q_{AM}\right)_{avg} = 8,275\ \text{psf}$

Net average q for one-way shear = $\left(q_1\right)_{net} = \left(q_{P1}\right)_{avg} - \left(q_{A1}\right)_{avg} = 8,579\ \text{psf}$

B.3.3. 24 in. Step 3 - Two-way or punching shear

a) Conventional approach

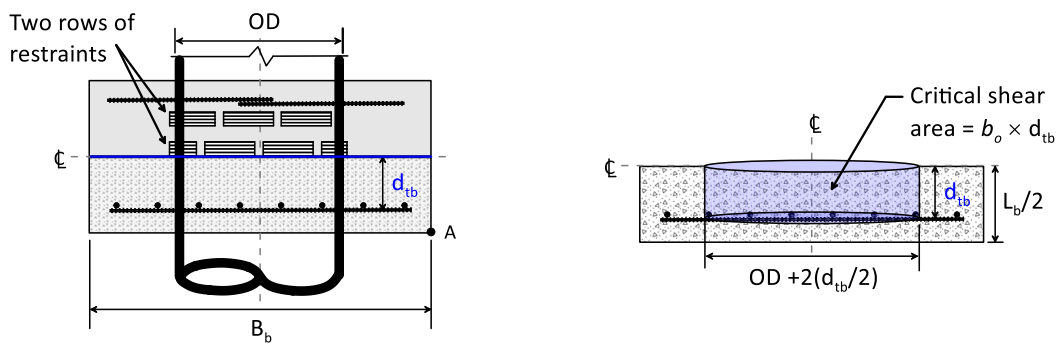

a) Position of restraints and d_{tb} b) Critical shear area

Figure B.7. Cross-section showing two rows of restraints for 24-in. pipe example

Figure B.7 shows a cross-section of the equivalent footing used in this example. Two layers of flexural steel reinforcing are used near the passive side of the anchor, with clear cover, cc = 3 in. The effective depth for this 24-in.-diameter pipe example:

$$d_{tb} = \frac{L_b = 4.5\text{ ft} \times 12\text{in./ft}}{2} - (cc = 3) - d_b = 0.625) = 8.375\text{ in.}$$

The perimeter of the critical section for shear, b_o, is:

$$b_o = \pi\left[(OD = 25.8\text{ in.}) \ + \ (d_{tb} = 0.625\text{ in.})\right] = 107.4\text{ in.}$$

Using Section 22.6.5.2 (and Table 22.6.5.2) of ACI 318-19, v_c is the smallest of:

$$\text{a)}\ v_c = 4\ \lambda_s \lambda\ \sqrt{f'_c} = 4 \times 1.0 \times 1.0 \times \sqrt{5{,}000}\ =\ \underline{283\text{ psi}} \leftarrow \text{CONTROLS}$$

$$\text{b)}\ v_c = \left(2 + \frac{4}{\beta}\right)\lambda_s \lambda \sqrt{f'_c} = \left(2 + \frac{4}{1.0}\right) \times 1.0 \times 1.0 \times \sqrt{5{,}000} =\ 424\text{ psi}$$

$$\text{c)}\ v_c = \left(2 + \frac{\alpha_s d_{tb}}{b_o}\right)\ \lambda_s \lambda\ \sqrt{f'_c} =\ \left(2 + \frac{40 \times 8.375\text{ in.}}{107.4\text{ in.}}\right) \times 1.0 \times 1.0 \times \sqrt{5{,}000} =\ 362\text{ psi}$$

Therefore,

$$\phi V_c = \phi v_c b_o d_{tb} =\ 0.75 \times 283\text{ psi} \times 107.4\text{ in.} \times 8.375\text{ in.}\ =\ 190{,}194\text{ lb}$$

ϕV_c represents the punching shear capacity of the section assuming no supplemental shear reinforcement is provided. This factored punching shear capacity, ϕV_c, must be greater than the factored service load, T_u. If not, the thickness of the anchor block would need to be increased.

- T_u = factored service load = 1.6 × ($T_{nominal}$ = 113,458 lb) = 181,532 lb.

  $\phi V_c = 190{,}914 \text{ lb} \geq T_u = 181{,}532 \text{ lb}$ ✓OK.

and the thickness of the anchor block, L_b = 2.0 ft = 24 in. is satisfactory.

b) Alternate approach

This step is to confirm that the shear capacity of the anchor block is adequate to resist the factored soil pressure. The soil pressure located within $d_{tb}/2$ of the pipe is neglected in this calculation.

The *average net* pressure over the tributary area for one-way shear is:

$(q_1)_{net}$ = 8,579 psf (See Table B.6)

This net average pressure on the passive face must be multiplied by the live load factor. The loaded area at the bottom of the "footing", A_L, is the gross block area minus the area inside the shear perimeter, i.e., excluding the area within a distance $d_{tb}/2$ from the periphery of the pipe. This is shown in Figure B.8.

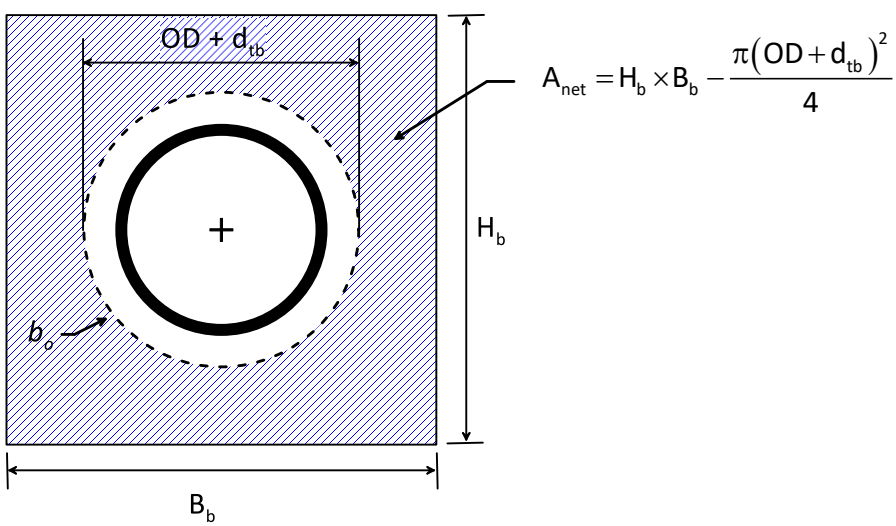

Figure B.8. Area to use for 24-in. pipe Step 2b check on punching shear

$$\text{Gross block area} = H_b \times B_b = 54\text{ in.} \times 54\text{ in.} = 2916.0\text{ in.}^2$$

$$\text{Area within the shear perimeter} = \frac{\pi \times \left(OD + d_{tb}\right)^2}{4}$$

$$= \frac{\pi \times \left[25.8\text{ in.} + 8.375\text{ in.}\right]^2}{4} = 917.3\text{ in.}^2$$

$$A_L = 2916.0\text{ in.}^2 - 163.4\text{in.}^2 = 1{,}998.7\text{ in.}^2 \times \frac{1\text{ ft}^2}{144\text{ in.}^2} = 13.88\text{ ft}^2$$

$V_u = (\gamma = 1.6) \times (q_{avg})_{net} \times A_L = 1.6 \times (8{,}579\text{ psf}) \times 13.88\text{ ft}^2 = 190{,}522\text{ lb.}$

Using this factored shear force V_u, the selected thickness of 2.0 ft = 24 in. is adequate since:

$\phi V_c = 190{,}914\text{ lb} \geq V_u = 190{,}522\text{ lb}$ ✓OK

B.3.4. 24 in. Step 4 - One-way shear

Verify the thickness of the anchor block based on one-way shear requirements, using the provisions of ACI 318-19 Section 22.5. Figure B.9 shows the terminology and dimensions used for the one-way shear example. The tributary area is located at the effective depth, d_{tb}, away from the edge of the pipe. The critical area for one-way shear is at the bottom of the block, as shown in Figure B.9 and described in Section 5.

Use equation (a) from Table 22.5.5.1 in ACI 318-19 as given previously as Eng. B.10 in the 8-in. pipe example, and verify the thickness of the anchor blocks as unreinforced concrete, using:

$$\phi V_c = \phi 2\lambda\sqrt{f'_c}\, b_w d_{tb} = 0.75 \times 2 \times (\lambda = 1.0) \times 70.7\text{ psi} \times 54\text{ in.} \times 8.375\text{ in.} = 47{,}961\text{ lb}$$

The factored, one-way shear, V_u is equal to the loaded area multiplied by the factored soil pressure and must be less than this ϕV_c or the thickness of the anchor block would need to be increased. The soil pressure located within d_{tb} of the face of the pipe is neglected in this calculation.

The *average net* pressure over the tributary area for one-way shear is:

$(q_1)_{net} = 8{,}579$ psf (See Table B.6)

The loaded area for one-way shear, A_L is taken as:

$$A_L = \left\{\frac{54\text{ in.} - 25.8\text{ in.}}{2} - 8.375\text{ in.}\right\} \times 54\text{ in.} = 307.8\text{ in.}^2 \times \frac{1\text{ ft}^2}{144\text{ in.}^2} = 2.14\text{ ft}^2$$

and

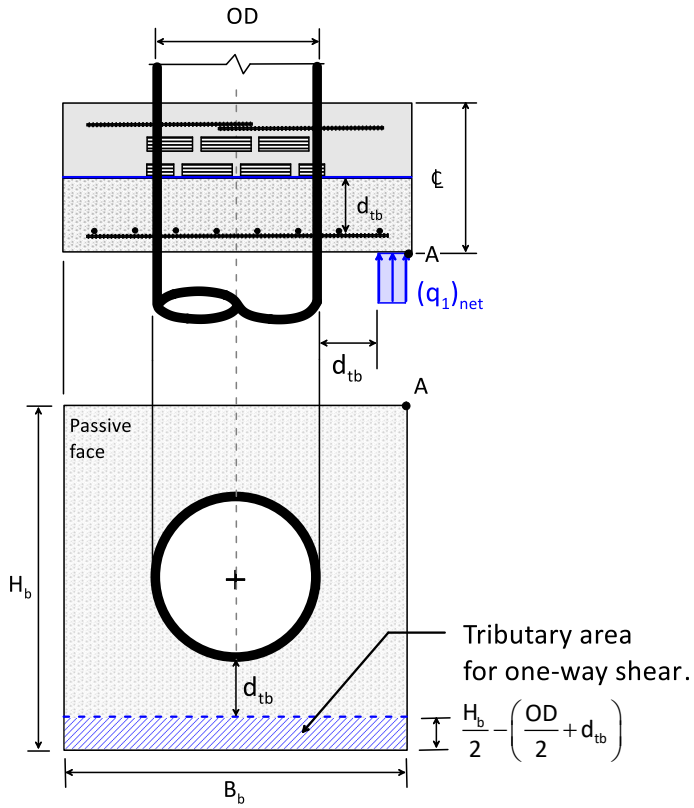

Figure B.9. One-way shear notation for 24 in. pipe example

$V_u = (\gamma = 1.6) \times [(q_1)_{avg} \times A_L = 1.6 \times (8{,}579 \text{ psf}) \times 2.14 \text{ ft}^2] = 29{,}374 \text{ lb}.$

The design check compares ϕV_c with V_u, verifying the selected thickness of L_b = 24 in. is adequate.

$\phi V_c = 47{,}916 \text{ lb} \geq V_u = 29{,}374 \text{ lb}$ ✓OK

Steps 2a, 2b, and 3 for two-way and one-way shear have verified that the dimensions of $H_b = B_b$ = 4.5 ft and L_b = 2.0 ft of the anchor block for the 24-in.-diameter DIPS HDPE DR17 pipe in this example are adequate based on ACI 318-19 design provisions. The next step is to evaluate the requirements for flexural reinforcement.

B.3.5. 24 in. Step 5 - Flexural reinforcement

Design of the flexural reinforcement to resist the bending moment in the anchor block. It is important to note that here, that the effective depth, d, for flexural design is the *full* depth of the section from the compression face (active face) to the midpoint of the two layers of horizontal and vertical reinforcement bars close to the passive face. The factored design moment will be

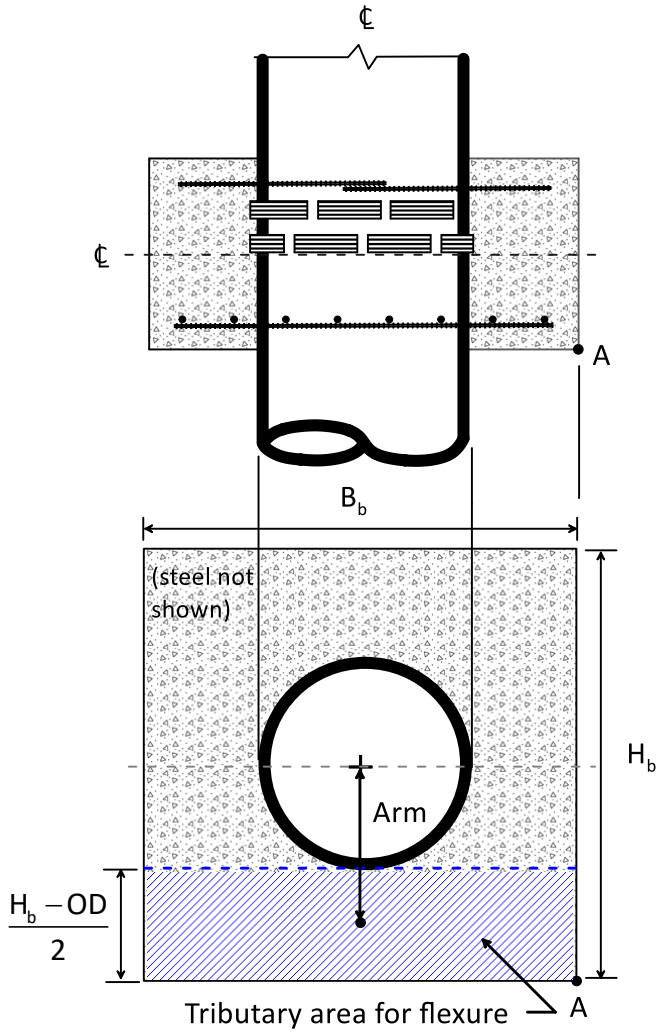

Figure B.10. Moment at center of anchor block for 24 in. pipe example

determined at the center of the anchor block. The loaded area that contributes to the bending moment is shown in Figure B.10.

The *average net* pressures on the passive face used in the moment calculations is:

$(q_M)_{net}$ = 8,275 psf (See Table B.6)

The moment at the block center is:

$$M_u = \underbrace{(\gamma = 1.6) \times (q_M)_{net}}_{\text{Factored net pressure}} \times \underbrace{\frac{H_b - OD}{2} \times B_b}_{\text{Tributary area}} \times \underbrace{\left(\frac{OD}{2} + \frac{H_b + OD}{4}\right)}_{\text{Moment arm}} \tag{B.24}$$

$$\frac{H_b - OD}{2} = \frac{4.5\text{ ft} - (25.8\text{ in.} \times 1\text{ ft}/12\text{ in.})}{2} = 1.175\text{ ft}$$

$$\text{Tributary area} = 1.175\text{ ft} \times 4.5\text{ ft} = 5.29\text{ ft}^2$$

$$\text{Moment arm} = \frac{OD}{2} + \frac{H_b - OD}{4} = \frac{(25.8\text{ in.}/12\text{ in.}/\text{ft})}{2} + \frac{4.5\text{ ft} - (28.8\text{ in.}/12\text{ in.}/\text{ft})}{4} = 1.663\text{ ft}$$

M_u = (γ = 1.6) × 8,275 psf ×1.663 ft × 5.29 = 116,476 lb-ft = 116.5 k-ft

Other values used for the design of the flexural reinforcement for this anchor block:

L_b = 24 in. which is the full thickness of the anchor block,

d = L_b – cc – d_b = 24 in. – 3 in. – 0.625 in. = 20.375 in., and

b_w = B_b – OD = 54 in. – 25.8 in. = 26.95 in. = 2.35 ft (reduced to account for the loss of section from the pipe penetration at the critical section).

The capacity of the section in flexure, ϕM_n, is determined based upon the parameters shown in equations below. The factored moment must be less than the capacity of the section, i.e., $M_u \leq \phi M_n$. A moment reduction factor of $\phi = 0.9$ is used. Table B.7 gives the parameters are used in the flexural steel calculations. In Table B.7 $A_g = H_b \times L_b$, the gross side area of the block.

Table B.7. Parameters for steel reinforcement for 24-in. pipe example

M_u (k-ft)	ϕ (assumed)	d (in.)	b_w (in.) (in.)	L_b (in.)	f'_c (ksi)	f_y (ksi)	A_g (in.^{2})
116.5	0.9	20.38	28.2	24	5	60	1,296

The flexural resistance factor in this example is:

$$R_{n,req'd} = \frac{M_u}{\phi\, b_w d^2} = \frac{116.5\text{ k-ft} \times (1000\text{ lb/k}) \times (12\text{ in./ft})}{0.9(28.20\text{ in.})(20.38\text{ in.})^2} = 132.6\text{ psi}$$

The required steel ratio is given by:

$$\rho_{req'd} = \frac{0.85 f_c'}{f_y}\left(1 - \sqrt{\frac{2\, R_{n,req'd}}{0.85 f_c'}}\right) = 0.00224$$

Next, the area of the reinforcing steel is calculated based on:

If $\rho_{req'd} < 0.0033$, use the smaller of $\frac{4 \times \rho_{req'd}}{3}$ or 0.0033 as $\rho_{to\,use}$, otherwise $\rho_{to\,use} = \rho_{req'd}$.

This example: Use $\frac{4 \times \rho_{req'd}}{3} = 0.00299$.

$$A_{s,req'd} = (0.00299)(\mathrm{d} \times \mathrm{b_w} = 20.38\,\text{in.} \times 28.20\,\text{in.}) = 1.718\,\text{in.}^2$$

$$A_{s,min} = 0.0018 \times (A_g = \mathrm{L_b} \times \mathrm{H_b} = 1296\,\text{in.}^2) = 2.333\,\text{in.}^2$$

$A_{s,to\,use}$ = the larger of $A_{s,req'd}$ or $A_{s,min}$.

In this example $A_{s,to\,use} = 2.333\,\text{in.}^2$

Use #5 that have a cross-sectional area of a_b = 0.31 in.^{2}. The number of bars to use in *each* direction of the square block is:

$$\#\text{ bars} = \frac{A_{s,\text{to use}}}{\mathrm{a_b}} = \frac{2.333\,\text{in.}^2}{\#5\text{ bar area} = 0.31\,\text{in.}^2} = 7.52\text{ bars}$$

Round up to an even number = 8 #5 bars each way in the block.

The # bars is rounded up to an even number. The reinforcing layout will be symmetrical, so use 8 #5 bars in each direction on each face (4 above/below the pipe and 4 left/right of the pipe). The area of steel provided then is the rounded # of bars times the area per bar = 8 bars × 0.31in.^{2} per bar = 2.48 in.^{2} in this example.

The development length is calculated using ACI 318-19 Eqn. 25.4.2.4a for #6 and smaller bars. The equations below are be used to calculate the required development length, ℓ_d. Design parameters used in these calculations are given in Table B.8.

Table B.8. Reinforcement and development parameters for 24-in. pipe example

c_b (in.)	cc (in.)	spacing (in.)	c_b/d_b	λ	ψ_c	ψ_e	ψ_g	ψ_o	ψ_r	ψ_s	ψ_t
3.03	3	6.05	2.5	1	0.93	1	1	1	1	0.8	1.3

The development length for straight, deformed bars in this example is:

$$\ell_d = \left[\frac{3}{40} \frac{f_y \psi_t \psi_e \psi_s \psi_g}{\lambda \sqrt{f'_c} \left(\frac{c_b + K_{tr}}{d_b} \right)} \right] d_b = 16.5 \text{ in.}$$

Use $K_{tr} = 0$.

The available length in the anchor block is half the width or height minus the cover of the bars, or

$$\text{length available} = ½ \times \left(H_b \text{ or } B_b \right) - cc = ½ \left(54 \text{ in.} \right) - 3 \text{ in.} = 24 \text{ in.}$$

Since this required development length is sufficient this block size, the bars do not need hooks.

The symbols used in the equations for development lengths were defined in Equations B.17 and B.18. Standard hook geometries were given in Table B.5

B.3.6. 24 in. Step 6 - Confirm section is tension-controlled

The final step in the design process is to confirm the section is tension controlled, and the 0.9 value is appropriate as a strength reduction factor. This is completed using the design value of the reinforcing steel area, $A_{s,\,to\,use}$, to determine depth of the concrete stress block, a.

$$a = \frac{A_{s,to\,use} f_y}{0.85 f'_c b_w} = 1.242 \text{ in.}$$

Then, the stress block depth, a, from the above equation is divided by β_1 = 0.8, to determine the depth the neutral axis, c.

$$c = a / \beta_1 = 1.552 \text{ in.}$$

The depth the neutral axis is then used to calculate the strain in the reinforcing steel, ε_t, at ultimate strength, which must be greater 0.005 to use the ϕ = 0.9 value as the strength reduction factor.

$$\varepsilon_c = \text{maximum concrete compressive strain} = 0.003,$$

$$\varepsilon_t = \text{steel tensile strain} = \varepsilon_c \times \frac{d - c}{c} = 0.0364$$

Since 0.0364 > 0.005, use of ϕ = 0.9 as the strength reduction factor is confirmed.

B.3.7. 24 in. Step 7 - Additional crack control reinforcement

The primary flexural reinforcing steel in the block is 8 #5 full length straight bars in each direction, placed on either side of, above, and below the pipe. These bars should be uniformly spaced, considering concrete cover requirements at the soil edge and adjacent to the pipe. Partial length bars can be added around the pipe section for additional crack control, as shown.

In addition to the primary reinforcement used to resist applied loads, additional reinforcement is required around the HDPE pipe section at the active face to help prevent cracking. Four #5 bars should be placed around to pipe to act as crack control reinforcement. Figure B.11 shows the final reinforcement on the passive and active faces.

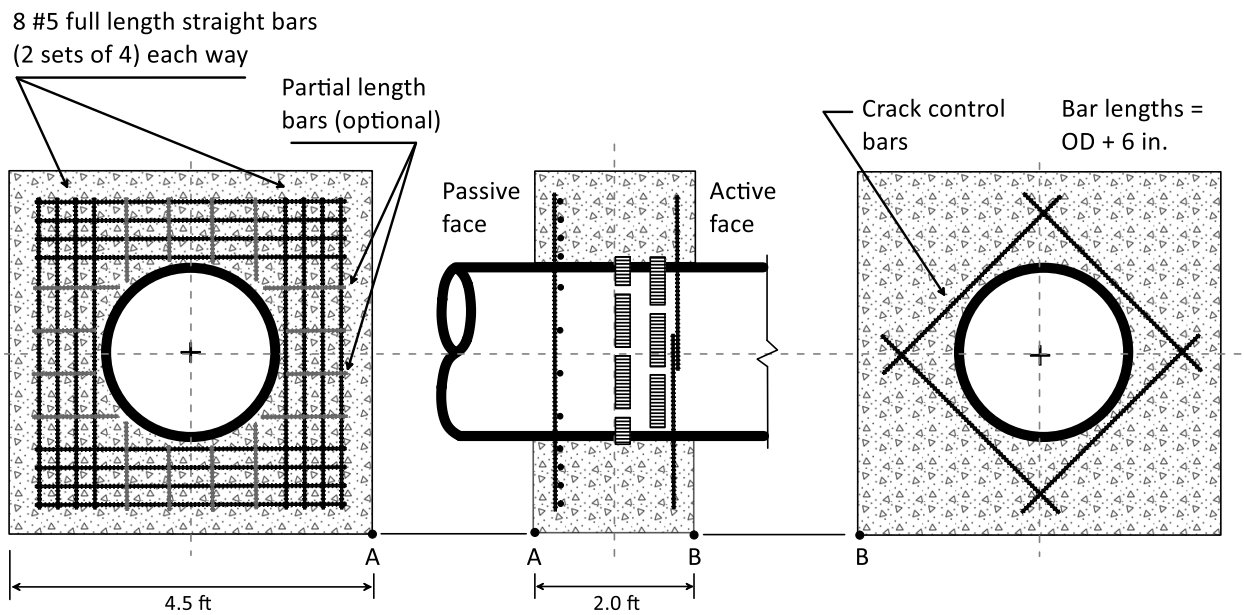

Figure B.11. Anchor block reinforcement for 24-in. pipe example